VOLVO V70 & XC70

OWNER'S MANUAL

Web Edition

Welcome to the world-wide family of Volvo owners. We trust that you will enjoy many years of safe driving in your Volvo, an automobile designed with your safety and comfort in mind. We encourage you to familiarize yourself with the equipment descriptions and operating instructions in this manual. We also urge you and your passengers to wear seat belts at all times in this (or any other) vehicle. And, of course, please do not operate a vehicle if you may be affected by alcohol, medication or any impairment that could hinder your ability to drive.

Your Volvo is designed to meet all applicable safety and emission standards. For further information please contact your retailer, or:

In the USA: Volvo Cars of North America, LLC Customer Care Center

P.O. Box 914

Rockleigh, New Jersey 07647-0914

1-800-458-1552

www.volvocars.us

In Canada: Volvo Cars of Canada Corp

National Customer Service

175 Gordon Baker Road

North York, Ontario M2H 2N7

1-800-663-8255

www.volvocanada.com

2008 © Volvo Car Corporation, All rights reserved.

Contents

00 Introduction

Important information..... 8
Important warnings..... 9
Environment..... 10

01 Safety

Occupant safety..... 14
Reporting safety defects..... 15
Seat belts 16
Supplemental Restraint System (SRS) 18
Occupant Weight Sensor 23
Side impact protection (SIPS) airbags 27
Volvo Inflatable Curtain (VIC) 29
Whiplash Protection System – WHIPS..... 30
Crash mode..... 32
Child safety..... 33
Child restraint systems..... 35
Infant seats..... 37
Convertible seats..... 39
Booster cushions..... 41
ISOFIX lower anchors..... 42
Top tether anchors..... 43
Child restraint registration and recalls..... 44
Integrated booster cushion..... 45
Child safety locks..... 48

02 Locks and alarm

Remote key and key blade..... 52
Private locking 59
Keyless drive..... 60
Locks..... 63
Alarm..... 65

03 Your driving environment

Instruments and controls..... 70
Ignition modes..... 77
Seats..... 79
Steering wheel..... 84
Lighting..... 85
Wipers and washers..... 91
Power windows..... 94
Mirrors..... 96
Power moonroof..... 98
HomeLink® Wireless Control System (option)..... 100
Starting the engine..... 103
Transmission..... 107
Brakes..... 110
Hill Descent Control (HDC)..... 112
Parking brake..... 114

04 Comfort and driving pleasure

Menus and messages..... 120
Climate system..... 124
Audio system..... 131
Bluetooth® hands-free connection..... 143
Rear Seat Entertainment - Dual Screen (RSE)–option 149
Trip computer..... 152
Compass..... 153
Stability system..... 155
Active chassis system–Four C..... 157
Cruise control..... 158
Collision warning with Auto-brake (option)..... 160
Adaptive Cruise Control–ACC (option)... 166
Distance alert 173
Driver Alert System (option) 176
Park assist (option)..... 181
Blind Spot Information System (option).. 184
Passenger compartment convenience... 188

05 During your trip

Driving recommendations..... 194
Refueling..... 198
Loading..... 202
Cargo area..... 207
Towing a trailer..... 210
Emergency towing..... 212

06 Maintenance and specifications

Volvo maintenance..... 216
Maintaining your car..... 217
Hood and engine compartment..... 219
Engine oil..... 220
Fluids..... 222
Replacing bulbs..... 224
Wiper blades and washer fluid..... 231
Battery..... 233
Fuses..... 236
Wheels and tires..... 244
Vehicle care..... 261
Label information..... 266
Specifications..... 268
Volvo programs..... 276

07 Index

Index..... 277

Important information

About this manual

- Before you operate your vehicle for the first time, please familiarize yourself with the information in chapter 3.
- Information contained in the balance of the manual is extremely useful and should be read after operating the vehicle for the first time.
- The manual is structured so that it can be used for reference. For this reason, it should be kept in the vehicle for ready access.

NOTE

- Optional or accessory equipment described in this manual may not be available in all countries or markets. Please note that some vehicles may be equipped differently, depending on special legal requirements.
- All information, illustrations and specifications contained in this manual are based on the latest product information available at the time of publication.
- Volvo reserves the right to make model changes at any time, or to change specifications or design without notice and without incurring obligation.
- Do not export your Volvo to another country before investigating that country's applicable safety and emission control requirements. In some cases it may be difficult or impossible to comply with these requirements. Modifications to the emission control system(s) may render your Volvo not certifiable for legal operation in the U.S., Canada and other countries.

WARNING

If your vehicle is involved in an accident, unseen damage may affect its drivability and safety.

Vehicle event data (Black box)

Your vehicle's driving and safety systems employ computers that monitor, and share with each other, information about your vehicle's operation. One or more of these computers may store what they monitor, either during normal vehicle operation or in a crash or near-crash event. Stored information may be read and used by:

- Volvo Car Corporation
- service and repair facilities
- law enforcement or government agencies
- others who may assert a legal right to know, or who obtain your consent to know such information.

Important warnings

Driver distraction

A driver has a responsibility to do everything possible to ensure his or her own safety and the safety of passengers in the vehicle and others sharing the roadway. Avoiding distractions is part of that responsibility.

Driver distraction results from driver activities that are not directly related to controlling the vehicle in the driving environment. Your new Volvo is, or can be, equipped with many feature-rich entertainment and communication systems. These include hands-free cellular telephones, navigation systems, and multipurpose audio systems. You may also own other portable electronic devices for your own convenience. When used properly and safely, they enrich the driving experience. Improperly used, any of these could cause a distraction.

For all of these systems, we want to provide the following warning that reflects the strong Volvo concern for your safety.Never use these devices or any feature of your vehicle in a way that distracts you from the task of driving safely. Distraction can lead to a serious accident. In addition to this general warning, we offer the following guidance regarding specific newer features that may be found in your vehicle

- Never use a hand-held cellular telephone while driving. Some jurisdictions prohibit cellular telephone use by a driver while the vehicle is moving.
- If your vehicle is equipped with a navigation system, set and make changes to your travel itinerary only with the vehicle parked.
- Never program your audio system while the vehicle is moving. Program radio presets with the vehicle parked, and use your programmed presets to make radio use quicker and simpler.
- Never use portable computers or personal digital assistants while the vehicle is moving.

Accessory installation

- We strongly recommend that Volvo owners install only genuine, Volvo-approved accessories, and that accessory installations be performed only by a trained and qualified Volvo service technician.
- Genuine Volvo accessories are tested to ensure compatibility with the performance, safety, and emission systems in your vehicle. Additionally, a trained and qualified Volvo service technician knows where accessories may and may not be safely installed in your Volvo. In all cases, please consult a trained and qualified Volvo service technician before installing any accessory in or on your vehicle.
- Accessories that have not been approved by Volvo may or may not be specifically tested for compatibility with your vehicle. Additionally, an inexperienced installer may not be familiar with some of your car's systems.
- Any of your car's performance and safety systems could be adversely affected if you install accessories that Volvo has not tested, or if you allow accessories to be installed by someone unfamiliar with your vehicle.
- Damage caused by unapproved or improperly installed accessories may not be covered by your new vehicle warranty. See your Warranty and Service Records Information booklet for more warranty information. Volvo assumes no responsibility for death, injury, or expenses that may result from the installation of non-genuine accessories.

Environment

Volvo and the environment

Volvo is committed to the well being of its customers. As a natural part of this commitment, we care about the environment in which we all live. Caring for the environment means an everyday involvement in reducing our environmental impact. Volvo's environmental activities are based on a holistic view, which means we consider the overall environmental impact of a product throughout its complete life cycle. In this context, design, production, product use, and recycling are all important considerations. In production, Volvo has partly or completely phased out several chemicals including CFCs, lead chromates, asbestos, and cadmium; and reduced the number of chemicals used in our plants 50% since 1991.

Volvo was the first in the world to introduce into production a three-way catalytic converter with a Lambda sond, now called the heated oxygen sensor, in 1976. The current version of this highly efficient system reduces emissions of harmful substances (CO, HC, NOx) from the exhaust pipe by approximately 95 – 99% and the search to eliminate the remaining emissions continues. Volvo is the only automobile manufacturer to offer CFC-free retrofit kits for the air conditioning system of all models as far back as the 1975 model 240. Advanced electronic engine controls and cleaner fuels are bringing us closer to our goal. After Volvo vehicles and parts have fulfilled their use, recycling is the next critical step in completing the life cycle. The metal content is about 75% of the total weight of a vehicle, which makes the vehicle among the most recycled industrial products. In order to have efficient and well-controlled recycling, dismantling information is available for all Volvo models. For Volvo, all homogeneous plastic parts weighing more than 3.4 oz. (100 grams) are marked with international symbols that indicate how the component is to be sorted for recycling. In addition to continuous environmental refinement of conventional gasoline-powered internal combustion engines, Volvo is actively looking at advanced technology alternative-fuel vehicles.

When you drive a Volvo, you become our partner in the work to lessen the car's impact on the environment. To reduce your vehicle's environmental impact, you can:

- Maintain proper air pressure in your tires. Tests have shown decreased fuel economy with improperly inflated tires.
- Follow the recommended maintenance schedule in your Warranty and Service Records Information booklet.
- Drive at a constant speed whenever possible.
- See a trained and qualified Volvo service technician as soon as possible for inspection if the check engine (malfunction indicator) light illuminates, or stays on after the vehicle has started.
- Properly dispose of any vehicle-related waste such as used motor oil, used batteries, brake pads, etc.
- When cleaning your vehicle, please use genuine Volvo car care products. All Volvo car care products are formulated to be environmentally friendly.

WARNING

PROPOSITION 65 WARNING!

Engine exhaust, some of its constituents, and certain vehicle components contain or emit chemicals known to the state of California to cause cancer, and birth defects or other reproductive harm. In addition, certain fluids contained in vehicles and certain products of component wear contain or emit chemicals known to the State of California to cause cancer, and birth defects or other reproductive harm.

Environment

WARNING

Certain components of this vehicle such as air bag modules, seat belt pretensioners, adaptive steering columns, and button cell batteries may contain Perchlorate material. Special handling may apply for service or vehicle end of life disposal.

See www.dtsc.ca.gov/hazardouswaste/perchlorate.

Occupant safety..... 14
Reporting safety defects..... 15
Seat belts 16
Supplemental Restraint System (SRS) 18
Occupant Weight Sensor 23
Side impact protection (SIPS) airbags 27
Volvo Inflatable Curtain (VIC) 29
Whiplash Protection System – WHIPS..... 30
Crash mode..... 32
Child safety..... 33
Child restraint systems..... 35
Infant seats..... 37
Convertible seats..... 39
Booster cushions..... 41
ISOFIX lower anchors..... 42
Top tether anchors..... 43
Child restraint registration and recalls..... 44
Integrated booster cushion..... 45
Child safety locks..... 48

G020871

SAFETY

01

Occupant safety

Volvo's concern for safety

Safety is Volvo's cornerstone. Our concern dates back to 1927 when the first Volvo rolled off the production line. Three-point seat belts (a Volvo invention), safety cages, and energy-absorbing impact zones were designed into Volvo vehicles long before it was fashionable or required by government regulation.

We will not compromize our commitment to safety. We continue to seek out new safety features and to refine those already in our vehicles. You can help. We would appreciate hearing your suggestions about improving automobile safety. We also want to know if you ever have a safety concern with your vehicle. Call us in the U.S. at: 1-800-458-1552 or in Canada at: 1-800-663-8255.

Occupant safety reminders

How safely you drive doesn't depend on how old you are but rather on:

- How well you see.
- Your ability to concentrate.
- How quickly you make decisions under stress to avoid an accident.

The following suggestions are intended to help you cope with the ever changing traffic environment.

- Never drink and drive.
- If you are taking any medication, consult your physician about its potential effects on your driving abilities.
- Take a driver-retraining course.
- Have your eyes checked regularly.
- Keep your windshield and headlights clean.
- Replace wiper blades when they start to leave streaks.
- Take into account the traffic, road, and weather conditions, particularly with regard to stopping distance.

Reporting safety defects in the U.S.

If you believe that your vehicle has a defect which could cause a crash or could cause injury or death, you should immediately inform the National Highway Traffic Safety Administration (NHTSA) in addition to notifying Volvo Cars of North America, LLC. If NHTSA receives similar complaints, it may open an investigation, and if it finds that a safety defect exists in a group of vehicles, it may order a recall and remedy campaign. However, NHTSA cannot become involved in individual problems between you, your retailer, or Volvo Cars of North America, LLC. To contact NHTSA, you may either call the Auto Safety Hotline toll-free at

1-888-327-4236

(TTY: 1-800-424-9153) or write to: NHTSA, U.S. Department of Transportation, Washington D.C. 20590.

You can also obtain other information about motor vehicle safety from:

http://www.safercar.gov

Volvo strongly recommends that if your vehicle is covered under a service campaign, safety or emission recall or similar action, it should be completed as soon as possible. Please check with your local retailer or Volvo Cars of North America, LLC if your vehicle is covered under these conditions.

NHTSA can be reached at:

Internet:

http://www.nhtsa.gov

Telephone:

1-888-DASH-2-DOT
(1-888-327-4236).

Reporting safety defects in Canada

If you believe your vehicle has a defect that could cause a crash or could cause injury or death, you should immediately inform Transport Canada in addition to notifying Volvo Cars of Canada Corp.

To contact Transport Canada, call (800) 333 – 0510, or (613) 993 – 9851 if you are calling from the Ottawa region.

Seat belts

General information

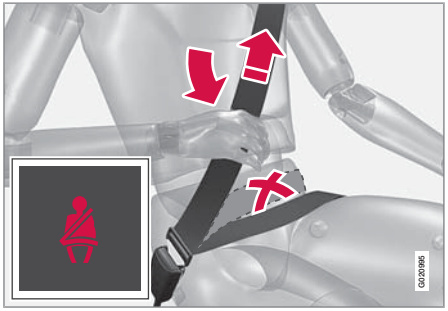

Adjusting the seat belt

Seat belts should always be worn by all occupants of your vehicle. Children should be properly restrained, using an infant, car, or booster seat determined by age, weight and height.

Volvo also believes no child should sit in the front seat of a vehicle.

Most states and provinces make it mandatory for occupants of a vehicle to use seat belts.

Seat belt pretensioners

All seat belts are equipped with pretensioners that reduce slack in the belts. These pretensioners are triggered in situations where the front or side impact airbags deploy, and in certain impacts from the rear. The front seat belts also include a tension reducing device which, in the event of a collision, limits the peak forces exerted by the seat belt on the occupant.

Buckling a seat belt

Pull the belt out far enough to insert the latch plate into the receptacle until a distinct click is heard. The seat belt retractor is normally "unlocked" and you can move freely, provided that the shoulder belt is not pulled out too far.

The retractor will lock up as follows:

- if the belt is pulled out rapidly
- during braking and acceleration
- if the vehicle is leaning excessively
- when driving in turns.

To make child seat installation easier, each seat belt (except for the driver's belt) is equipped with a locking mechanism to help keep the seat belt taut. See page 34 for more information regarding the Automatic Locking Retractor (ALR).

When wearing the seat belt remember:

- The belt should not be twisted or turned.
- The lap section of the belt must be positioned low on the hips (not pressing against the abdomen).
- Make sure that the shoulder belt is rolled up into its retractor and that the shoulder and lap belts are taut.

Seat belt reminder

The seat belt reminder consists of an audible signal and a symbol in the instrument panel that alert the driver if his/her seat belt is not fastened.

Unbuckling the seat belt

To remove the seat belt, press the red section on the seat belt receptacle. Before exiting the vehicle, check that the seat belt retracts fully after being unbuckled. If necessary, guide the belt back into the retractor slot.

Seat belt maintenance

Check periodically that the seat belts are in good condition. Use water and a mild detergent for cleaning. Check seat belt mechanism function as follows: attach the seat belt and pull rapidly on the strap.

WARNING

Never use a seat belt for more than one occupant. Never wear the shoulder portion of the belt under the arm, behind the back or otherwise out of position. Such use could cause injury in the event of an accident. As seat belts lose much of their strength when exposed to violent stretching, they should be replaced after any collision, even if they appear to be undamaged.

WARNING

- Never repair the belt yourself; have this work done by a trained and qualified Volvo service technician only.
- Any device used to induce slack into the shoulder belt portion of the three-point belt system will have a detrimental effect on the amount of protection available to you in the event of a collision.
- The seat back should not be tilted too far back. The shoulder belt must be taut in order to function properly.
- Do not use child safety seats or child booster cushions/backrests in the front passenger's seat. We also recommend that children who have outgrown these devices sit in the rear seat with the seat belt properly fastened.

Seat belt use during pregnancy

The seat belt should always be worn during pregnancy. But it is crucial that it be worn in the correct way. The diagonal section should wrap over the shoulder then be routed between the breasts and to the side of the belly. The lap section should lay flat over the thighs and as low as possible under the belly. It must never be allowed to ride upward. Remove all slack from the belt and ensure that it fits close to the body without any twists.

As a pregnancy progresses, pregnant drivers should adjust their seats and steering wheel such that they can easily maintain control of the vehicle as they drive (which means they must be able to easily operate the foot pedals and steering wheel). Within this context, they should strive to position the seat with as large a distance as possible between their belly and the steering wheel.

Child seats

Please refer to page 35 for information on securing child seats with the seat belts.

Supplemental Restraint System (SRS)

General information

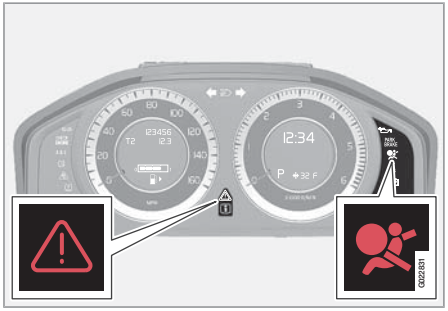

Warning symbols in the instrument panel

As an enhancement to the three-point seat belts, your Volvo is equipped with a Supplemental Restraint System (SRS). Volvo's SRS consists of seat belt pretensioners, front airbags, side impact airbags, a front passenger occupant weight sensor, and inflatable curtains. All of these systems are monitored by the SRS control module. An SRS warning light in the instrument panel (see the illustration) illuminates when the ignition is in modes **I**, **II**, or **III**, and will normally go out after approximately 6 seconds if no faults are detected in the system.

Where applicable, a text message will also be displayed when the SRS warning light illuminates. If this warning symbol is not functioning properly, the general warning symbol illuminates and a text message will be displayed. See also page 72 and page 74 for more information about indicator and warning symbols.

WARNING

- If the SRS warning light stays on after the engine has started or if it illuminates while you are driving, have the vehicle inspected by a trained and qualified Volvo service technician as soon as possible.
- Never try to repair any component or part of the SRS yourself. Any interference in the system could cause malfunction and serious injury. All work on these systems should be performed by a trained and qualified Volvo service technician.

WARNING

If your vehicle has been subjected to flood conditions (e.g. soaked carpeting/standing water on the floor of the vehicle) or if your vehicle has become flood-damaged in any way, do not attempt to start the vehicle or insert the remote control into the ignition slot before disconnecting the battery (see below). This may cause airbag deployment which could result in personal injury. Have the vehicle towed to a trained and qualified Volvo service technician for repairs.

Automatic transmission:

Before attempting to tow the vehicle, use the following procedure to override the shiftlock system to move the gear selector to the neutral position:

1. Switch off the ignition for at least 10 minutes and disconnect the battery
2. Wait at least one minute.
3. Insert the remote key into the ignition slot and press the Start button (without depressing brake pedal) to go to ignition mode **II**. See page 77 for more information.
4. Press firmly on the brake pedal.
5. Move the gear selector from Park (**P**) to the Neutral (**N**) position. see page 107 for information on manually overriding the shiftlock system.

Front airbags

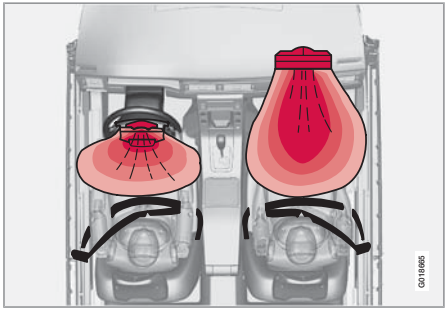

The front airbag system

The front airbags supplement the three-point seat belts. For these airbags to provide the protection intended, seat belts must be worn at all times.

The front airbag system includes gas generators surrounded by the airbags, and deceleration sensors that activate the gas generators, causing the airbags to be inflated with nitrogen gas.

Location of the passenger's side front airbag

As the movement of the seats' occupants compresses the airbags, some of the gas is expelled at a controlled rate to provide better cushioning. Both seat belt pretensioners also deploy, minimizing seat belt slack. The entire process, including inflation and deflation of the airbags, takes approximately one fifth of a second.

The location of the front airbags is indicated by **SRS AIRBAG** embossed on the steering wheel pad and above the glove compartment, and by decals on both sun visors and on the front and far right side of the dash.

The driver's side front airbag is folded and located in the steering wheel hub.

The passenger's side front airbag is folded behind a panel located above the glove compartment.

WARNING

- The airbags in the vehicle are designed to be a SUPPLEMENT to–not a replacement for–the three-point seat belts. For maximum protection, wear seat belts at all times. Be aware that no system can prevent all possible injuries that may occur in an accident.
- Never drive a vehicle with a steering wheel-mounted airbag with your hands on the steering wheel pad/airbag housing.
- The front airbags are designed to help prevent serious injury. Deployment occurs very quickly and with considerable force. During normal deployment and depending on variables such as seating position, one may experience abrasions, bruises, swellings, or other injuries as a result from deployment of one or both of the airbags.
- When installing any accessory equipment, make sure that the front airbag system is not damaged. Any interference in the system could cause malfunction.

Supplemental Restraint System (SRS)

Front airbag deployment

- The front airbags are designed to deploy during certain frontal or front-angular collisions, impacts, or decelerations, depending on the crash severity, angle, speed and object impacted. The airbags may also deploy in certain non-frontal collisions where rapid deceleration occurs.
- The SRS sensors, which trigger the front airbags, are designed to react to both the impact of the collision and the inertial forces generated by it, and to determine if the intensity of the collision is sufficient for the seat belt pretensioners and/or airbags to be deployed.

However, not all frontal collisions activate the front airbags.

- If the collision involves a nonrigid object (e.g., a snow drift or bush), or a rigid, fixed object at a low speed, the front airbags will not necessarily deploy.
- Front airbags do not normally deploy in a side impact collision, in a collision from the rear or in a rollover situation.
- The amount of damage to the bodywork does not reliably indicate if the airbags should have deployed or not.

WARNING

- Do not use child safety seats or child booster cushions/backrests in the front passenger's seat. We also recommend that occupants under 4 feet 7 inches (140 cm) in height who have outgrown these devices sit in the rear seat with the seat belt fastened[1].
- Never drive with the airbags deployed. The fact that they hang out can impair the steering of your vehicle. Other safety systems can also be damaged.
- The smoke and dust formed when the airbags are deployed can cause skin and eye irritation in the event of prolonged exposure.

Should you have questions about any component in the SRS system, please contact a trained and qualified Volvo service technician or Volvo Customer Support:

In the USA

Volvo Cars of North America, LLC

Customer Care Center

P.O. Box 914 Rockleigh, New Jersey 07647-0914

1-800-458-1552

www.volvocars.us

In Canada

Volvo Cars of Canada Corp.

National Customer Service

175 Gordon Baker Road

North York, Ontario M2H 2N7

1-800-663-8255

www.volvocanada.com

[1] See also the Occupant Weight Sensor information see page 23.

NOTE

- Deployment of front airbags occurs only one time during an accident. In a collision where deployment occurs, the airbags and seat belt pretensioners activate. Some noise occurs and a small amount of powder is released. The release of the powder may appear as smoke-like matter. This is a normal characteristic and does not indicate fire.
- Volvo's front airbags use special sensors that are integrated with the front seat buckles. The point at which the airbag deploys is determined by whether or not the seat belt is being used, as well as the severity of the collision.
- Collisions can occur where only one of the airbags deploys. If the impact is less severe, but severe enough to present a clear injury risk, the airbags are triggered at partial capacity. If the impact is more severe, the airbags are triggered at full capacity.

Airbag decals

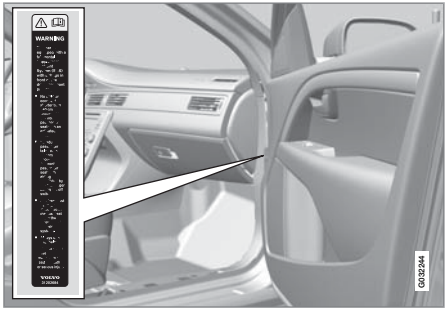

Airbag decal on the far right end of the passenger's dashboard

Airbag decal on the outside of both sun visors

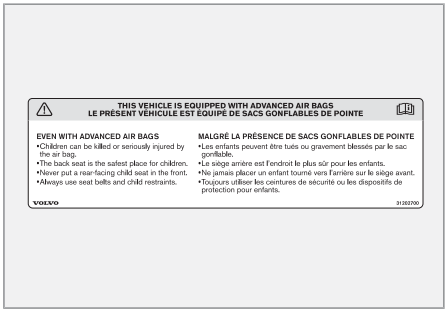

Airbag decal on passenger's side dashboard

Supplemental Restraint System (SRS)

WARNING

- Children must never be allowed in the front passenger's seat. Volvo recommends that ALL occupants (adults and children) shorter than 4 feet 7 inches (140 cm) be seated in the back seat of any vehicle with a passenger-side front airbag.
- Occupants in the front passenger's seat must never sit on the edge of the seat, sit leaning toward the instrument panel or otherwise sit out of position.
- The occupant's back must be as upright as comfort allows and be against the seat back with the seat belt properly fastened.
- Feet must be on the floor, e.g., not on the dash, seat or out of the window.

WARNING

- No objects or accessory equipment, e.g. dashboard covers, may be placed on, attached to, or installed near the air bag hatch (the area above the glove compartment) or the area affected by airbag deployment (see the illustration on page 19).
- There should be no loose articles, such as coffee cups on the floor, seat, or dashboard area.
- Never try to open the airbag cover on the steering wheel or the passenger's side dashboard. This should only be done by a trained and qualified Volvo service technician.
- Failure to follow these instructions can result in injury to the vehicle occupants.

General information

Occupant Weight Sensor (OWS) indicator light

Disabling the passenger's side front airbag

Volvo recommends that ALL occupants (adults and children) shorter than 4 feet 7 inches (140 cm) be seated in the back seat of any vehicle with a front passenger side airbag, and be properly restrained for their size and weight. For child safety recommendations, see page 34.

The Occupant Weight Sensor (OWS) is designed to meet the regulatory requirements of Federal Motor Vehicle Safety Standard (FMVSS) 208 and is designed to disable (will not inflate) the passenger's side front airbag under certain conditions.

The OWS works with sensors that are part of the front passenger's seat and seat belt. The sensors are designed to detect the presence of a properly seated occupant and determine if the passenger's side front airbag should be enabled (may inflate) or disabled (will not inflate).

The OWS will disable (will not inflate) the passenger's side front airbag when:

- the front passenger's seat is unoccupied, or has small/medium objects in the front seat,
- the system determines that an infant is present in a rear-facing infant seat that is installed according to the manufacturer's instructions,
- the system determines that a small child is present in a forward-facing child restraint that is installed according to the manufacturer's instructions,
- the system determines that a small child is present in a booster seat,
- a front passenger takes his/her weight off of the seat for a period of time,
- a child or a small person occupies the front passenger's seat.

The OWS uses a PASSENGER AIRBAG OFF indicator lamp which will illuminate and stay on to remind you that the passenger's side front airbag is disabled. The PASSENGER AIRBAG OFF indicator lamp is located in the overhead console, near the base of the rearview mirror.

NOTE

When the ignition is switched on, the OWS indicator light will go on for up to 10 seconds while the system performs a self-diagnostic test.

However, if a fault is detected in the system:

- The OWS indicator light will stay on
- The SRS warning light (see page 18) will come on and stay on
- The message **PASS. AIRBAG OFF SERVICE URGENT** will be displayed in the information display.

WARNING

If a fault in the system is detected and indicated as described, be aware that the passenger's side front airbag will not deploy in the event of a collision. In this case, the SRS system and Occupant Weight Sensor should be inspected by a trained and qualified Volvo service technician as soon as possible.

Occupant Weight Sensor

WARNING

- Never try to open, remove, or repair any components in the OWS system. This could result in system malfunction. Maintenance or repairs should only be carried out by an a trained and qualified Volvo service technician.
- The front passenger's seat should not be modified in any way. This could reduce pressure on the seat cushion, which might interfere with the OWS system's function.

Passenger's seat occupancy status	OWS indicator light status	Passenger's side front airbag status
Seat unoccupied	OWS indicator light lights up.	Passenger's side front airbag disabled
Seat occupied by low weight occupant/object[A]	OWS indicator light lights up	Passenger's side front airbag disabled
Seat occupied by heavy occupant/object	OWS indicator light is **not** lit	Passenger's side front airbag enabled

[A] Volvo recommends that children always be properly restrained in appropriate child restraints in the rear seats. Do not assume that the passenger's side front airbag is disabled unless the PASSENGER AIRBAG OFF indicator lamp is lit. Make sure the child restraint is properly installed. If there is any doubt as to the status of the passenger's side front airbag, move the child restraint to the rear seat.

The OWS is designed to enable (may inflate) the passenger's side front airbag anytime the system senses that a person of adult size is sitting properly in the front passenger's seat.

The PASSENGER AIRBAG OFF indicator lamp will be off and remain off.

If a person of adult size is sitting in the front passenger's seat, but the PASSENGER AIRBAG OFF indicator lamp is on, it is possible that the person isn't sitting properly in the seat. If this happens:

- Turn the vehicle off and ask the person to place the seatback in an upright position.
- Have the person sit upright in the seat, centered on the seat cushion, with the person's legs comfortably extended.
- Restart the vehicle and have the person remain in this position for about two minutes. This will allow the system to detect that person and enable the passenger's frontal airbag.
- If the PASSENGER AIRBAG OFF indicator lamp remains on even after this, the person should be advised to ride in the rear seat.

This condition reflects limitations of the OWS classification capability. It does not indicate OWS malfunction.

Modifications

If you are considering modifying your vehicle in any way to accommodate a disability, for example by altering or adapting the driver's or front passenger's seat(s) and/or airbag systems, please contact Volvo at:

In the USA

Volvo Cars of North America, LLC

Customer Care Center

P.O. Box 914 Rockleigh, New Jersey 07647-0914

1-800-458-1552

In Canada

Volvo Cars of Canada Corp.

National Customer Service

175 Gordon Baker Road North York, Ontario M2H 2N7

1-800-663-8255

WARNING

- No objects that add to the total weight on the seat should be placed on the front passenger's seat. If a child is seated in the front passenger's seat with any additional weight, this extra weight could cause the OWS system to enable the airbag, which might cause it to deploy in the event of a collision, thereby injuring the child.
- The seat belt should never be wrapped around an object on the front passenger's seat. This could interfere with the OWS system's function.
- The front passenger's seat belt should never be used in a way that exerts more pressure on the passenger than normal. This could increase the pressure exerted on the weight sensor by a child, and could result in the airbag being enabled, which might cause it to deploy in the event of a collision, thereby injuring the child.

WARNING

- Keep the following points in mind with respect to the OWS system. Failure to follow these instructions could adversely affect the system's function and result in serious injury to the occupant of the front passenger's seat:
- The full weight of the front seat passenger should always be on the seat cushion. The passenger should never lift him/herself off the seat cushion using the armrest in the door or the center console, by pressing the feet on the floor, by sitting on the edge of the seat cushion, or by pressing against the backrest in a way that reduces pressure on the seat cushion. This could cause OWS to disable the front, passenger's side airbag.

Occupant Weight Sensor

WARNING

- Do not place any type of object on the front passenger's seat in such a way that jamming, pressing, or squeezing occurs between the object and the front seat, other than as a direct result of the correct use of the Automatic Locking Retractor/Emergency Locking Retractor (ALR/ELR) seat belt (see page 34).
- No objects should be placed under the front passenger's seat. This could interfere with the OWS system's function.

Side impact protection (SIPS) airbags

General information

Location of the side impact (SIPS) airbags (front seats only)

As an enhancement to the structural side impact protection built into your vehicle, it is also equipped with Side Impact Protection System (SIPS) airbags.

The SIPS airbag system is designed to help increase occupant protection in the event of certain side impact collisions. The SIPS airbags are designed to deploy only during certain side-impact collisions, depending on the crash severity, angle, speed and point of impact.

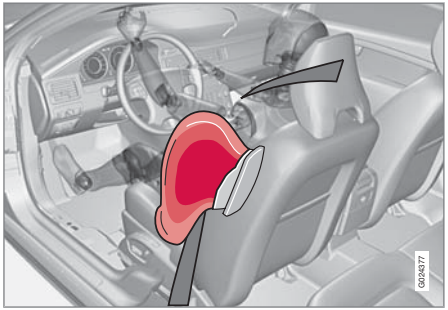

SIPS airbag deployment

SIPS airbag deployment (one airbag) occurs only on the side of the vehicle affected by the impact. The airbags are not designed to deploy in all side impact situations.

SIPS decal on the front of the driver's door opening

NOTE

SIPS airbag deployment (one airbag) occurs only on the side of the vehicle affected by the impact. The airbags are not designed to deploy in all side impact situations.

Components in the SIPS airbag system

This SIPS airbag system consists of a gas generator, the side airbag modules built into the outboard sides of both front seat backrests, and electronic sensors/wiring.

Side impact protection (SIPS) airbags

WARNING

- The SIPS airbag system is a supplement to the structural Side Impact Protection System and the three-point seat belt system. It is not designed to deploy during collisions from the front or rear of the vehicle or in rollover situations.
- The use of seat covers on the front seats may impede SIPS airbag deployment.
- No objects, accessory equipment or stickers may be placed on, attached to or installed near the SIPS airbag system or in the area affected by SIPS airbag deployment.
- Never try to open or repair any components of the SIPS airbag system. This should be done only by a trained and qualified Volvo service technician.
- In order for the SIPS airbag to provide its best protection, both front seat occupants should sit in an upright position with the seat belt properly fastened.
- Failure to follow these instructions can result in injury to the occupants of the vehicle in the event of an accident.

Volvo Inflatable Curtain (VIC)

General information

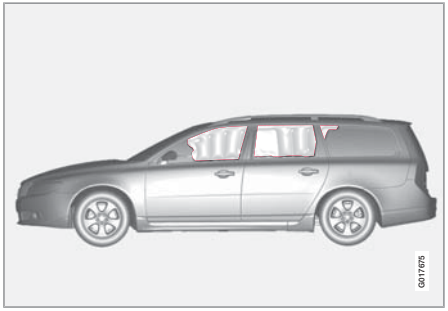

This system consists of inflatable curtains located along the sides of the roof liners, stretching from the center of both front side windows to the rear edge of the rear side door windows. It is designed to help protect the heads of the occupants of the front seats and the occupant of the outboard rear seating positions in certain side impact collisions.

In certain side impacts, **both** the Inflatable Curtain (VIC) and the Side Impact Airbag System (SIPS airbag) will deploy. The VIC and the SIPS airbag deploy simultaneously.

NOTE

If the inflatable curtain deploys, it remains inflated for approximately 3 seconds.

WARNING

- The VIC system is a supplement to the Side Impact Protection System. It is not designed to deploy during collisions from the front or rear of the vehicle or in rollover situations.
- Never try to open or repair any components of the VIC system. This should be done only by a trained and qualified Volvo service technician.
- Never hang heavy items from the ceiling handles. This could impede deployment of the Inflatable Curtain.
- The cargo area and rear seat should not be loaded to a level higher than 2 in. (5 cm) below the upper edge of the rear side windows. Objects placed higher than this level could impede the function of the Volvo Inflatable Curtain.

WARNING

In order for the VIC to provide its best protection, both front seat occupants and both outboard rear seat occupants should sit in an upright position with the seat belt properly fastened; adults using the seat belt and children using the proper child restraint system. Only adults should sit in the front seats. Children must never be allowed in the front passenger seat, see page 34 for guidelines. Failure to follow these instructions can result in injury to the vehicle occupants in an accident.

Whiplash Protection System – WHIPS

General information

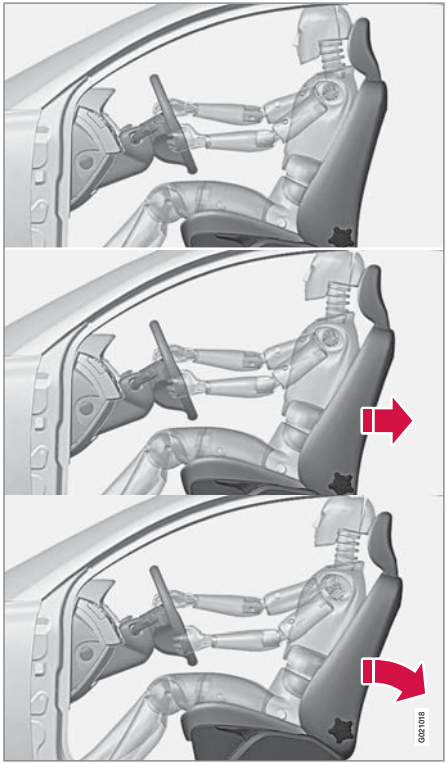

Whiplash Protection System (WHIPS) – front seats only

The WHIPS system consists of specially designed hinges and brackets on the front seat backrests designed to help absorb some of the energy generated in a collision from the rear (when the vehicle is rear-ended).

In the event of a collision of this type, the hinges and brackets of the front seat backrests are designed to change position slightly to allow the backrest/head restraint to help support the occupant's head before moving slightly rearward. This movement helps absorb some of the forces that could result in whiplash.

WARNING

- The WHIPS system is designed to supplement the other safety systems in your vehicle. For this system to function properly, the three-point seat belt must be worn. Please be aware that no system can prevent all possible injuries that may occur in an accident.
- The WHIPS system is designed to function in certain collisions from the rear, depending on the crash severity, angle and speed.

WARNING

- Occupants in the front seats must never sit out of position. The occupant's back must be as upright as comfort allows and be against the seat back with the seat belt properly fastened.
- If your vehicle has been involved in a rear-end collision, the front seat backrests must be inspected by a trained and qualified Volvo service technician, even if the seats appear to be undamaged. Certain components in the WHIPS system may need to be replaced.
- Do not attempt to service any component in the WHIPS system yourself.

Whiplash Protection System – WHIPS

WARNING

- Boxes, suitcases, etc. wedged behind the front seats could impede the function of the WHIPS system.
- If the rear seat backrests are folded down, cargo must be secured to prevent it from sliding forward against the front seat backrests in the event of a collision from the rear. This could interfere with the action of the WHIPS system.

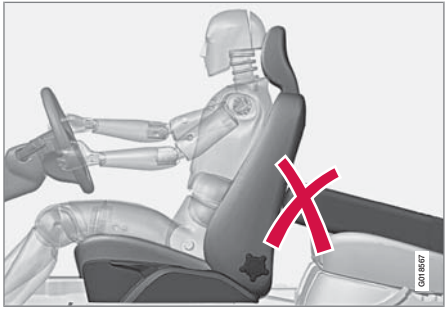

WARNING

Any contact between the front seat backrests and the folded rear seat or a rear-facing child seat could impede the function of the WHIPS system. If the rear seat is folded down, the occupied front seats must be adjusted forward so that they do not touch the folded rear seat.

Crash mode

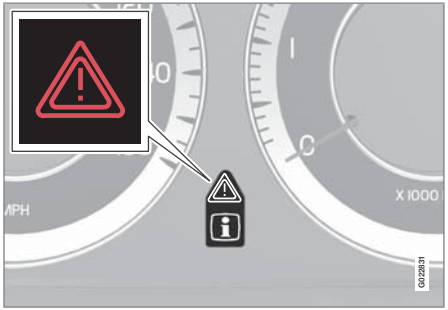

Driving after a collision

If the vehicle has been involved in a collision, the text **SAFETY MODE SEE MANUAL** may appear in the information display. This indicates that the vehicle's functionality has been reduced.

NOTE

This text can only be shown if the display is undamaged and the vehicle's electrical system is intact.

Safety mode is a feature that is triggered if one or more of the safety systems (e.g. front or side airbags, an inflatable curtain, or one or more of the seat belt pretensioners) has deployed. The collision may have damaged an important function in the vehicle, such as the fuel lines, sensors for one of the safety systems, the brake system, etc.

WARNING

- Never attempt to repair the vehicle yourself or to reset the electrical system after the vehicle has displayed **SAFETY MODE SEE MANUAL**. This could result in injury or improper system function.
- Restoring the vehicle to normal operating status should only be done by a trained and qualified Volvo service technician.
- After **SAFETY MODE SEE MANUAL** has been displayed, if you detect the odor of fuel vapor, or see any signs of fuel leakage, do not attempt to start the vehicle. Leave the vehicle immediately.

Attempting to start the vehicle

If damage to the vehicle is minor and there is no fuel leakage, you may attempt to start the vehicle. To do so:

1. Remove the remote control from the ignition slot.
2. Reinsert the remote in the ignition slot. The vehicle will then attempt to reset Safety mode to normal status.
3. Try to start the vehicle.

Moving the vehicle

If the electrical system is able to reset system status to normal (**SAFETY MODE SEE MANUAL** will no longer be shown in the display), the vehicle may be moved carefully from its present position, if for example, it is blocking traffic. It should, however, not be moved farther than is absolutely necessary.

WARNING

Even if the vehicle appears to be drivable after Safety mode has been set, it should not be driven or towed (pulled by another vehicle). There may be concealed damage that could make it difficult or impossible to control. The vehicle should be transported on a flatbed tow truck to a trained and qualified Volvo service technician for inspection/repairs.

Children should be seated safely

Volvo recommends the proper use of restraint systems for all occupants including children. Remember that, regardless of age and size, a child should always be properly restrained in a vehicle.

Your vehicle is also equipped with ISOFIX/LATCH attachments, which make it more convenient to install child seats.

Some restraint systems for children are designed to be secured in the vehicle by lap belts or the lap portion of a lap-shoulder belt. Such child restraint systems can help protect children in vehicles in the event of an accident only if they are used properly. However, children could be endangered in a crash if the child restraints are not properly secured in the vehicle. Failure to follow the installation instructions for your child restraint can result in your child striking the vehicle's interior in a sudden stop.

Holding a child in your arms is NOT a suitable substitute for a child restraint system. In an accident, a child held in a person's arms can be crushed between the vehicle's interior and an unrestrained person. The child could also be injured by striking the interior, or by being ejected from the vehicle during a sudden maneuver or impact. The same can also happen if the infant or child rides unrestrained on the seat. Other occupants should also be properly restrained to help reduce the chance of injuring or increasing the injury of a child.

All states and provinces have legislation governing how and where children should be carried in a vehicle. Find out the regulations existing in your state or province. Recent accident statistics have shown that children are safer in rear seating positions than front seating positions when properly restrained. A child restraint system can help protect a child in a vehicle. Here's what to look for when selecting a child restraint system:

It should have a label certifying that it meets applicable Federal Motor Vehicle Safety Standards (FMVSS 213) – or in Canada, CMVSS 213.

Make sure the child restraint system is approved for the child's height, weight and development – the label required by the standard or regulation, or instructions for infant restraints, typically provide this information.

In using any child restraint system, we urge you to carefully look over the instructions that are provided with the restraint. Be sure you understand them and can use the device properly and safely in this vehicle. A misused child restraint system can result in increased injuries for both the infant or child and other occupants in the vehicle.

When a child has outgrown the child safety seat, you should use the rear seat with the standard seat belt fastened. The best way to help protect the child here is to place the child on a cushion so that the seat belt is properly located on the hips (see the illustration on page 41). Legislation in your state or province may mandate the use of a child seat or cushion in combination with the seat belt, depending on the child's age and/or size. Please check local regulations.

A specially designed and tested booster cushion (not available in Canada) can be obtained from your Volvo retailer for children weighing 33 – 80 lb. (15 – 36 kg) and 38 – 54 inches (97 – 137 cm) in height.

WARNING

- Do not use child safety seats or child booster cushions/backrests in the front passenger's seat. We also recommend that children under 4 feet 7 inches (140 cm) in height who have outgrown these devices sit in the rear seat with the seat belt fastened.
- On hot days, the temperature in the vehicle interior can rise very quickly. Exposure to these high temperatures for even a short period of time can cause heat-related injury or death. Small children are particularly at risk.

Child safety

Automatic Locking Retractor/ Emergency Locking Retractor (ALR/ ELR)

To make child seat installation easier, each seat belt (except for the driver's belt) is equipped with a locking mechanism to help keep the seat belt taut.

When attaching the seat belt to a child seat:

1. Attach the seat belt to the child seat according to the child seat manufacturer's instructions.
2. Pull the seat belt out as far as possible.
3. Insert the seat belt latch plate into the buckle (lock) in the usual way.
4. Release the seat belt and pull it taut around the child seat.

A sound from the seat belt retractor will be audible at this time and is normal. The belt will now be locked in place. This function is automatically disabled when the seat belt is unlocked and the belt is fully retracted.

WARNING

Do not use child safety seats or child booster cushions/backrests in the front passenger's seat. We also recommend that children who have outgrown these devices sit in the rear seat with the seat belt properly fastened.

Volvo's recommendations

Why does Volvo believe that no child should sit in the front seat of a vehicle? It's quite simple really. A front airbag is a very powerful device designed, by law, to help protect an adult.

Because of the size of the airbag and its speed of inflation, a child should never be placed in the front seat, even if he or she is properly belted or strapped into a child safety seat. Volvo has been an innovator in safety for over seventy-five years, and we'll continue to do our part. But we need your help. Please remember to put your children in the back seat, and buckle them up.

Volvo has some very specific recommendations:

- Always wear your seat belt.
- Airbags are a SUPPLEMENTAL safety device which, when used with a three-point seat belt can help reduce serious injuries during certain types of accidents. Volvo recommends that you do not disconnect the airbag system in your vehicle.
- Volvo strongly recommends that everyone in the vehicle be properly restrained.
- Volvo recommends that ALL occupants (adults and children) shorter than 4 feet 7 inches (140 cm) be seated in the back seat of any vehicle with a front passenger side airbag.

Drive safely!

Child restraints

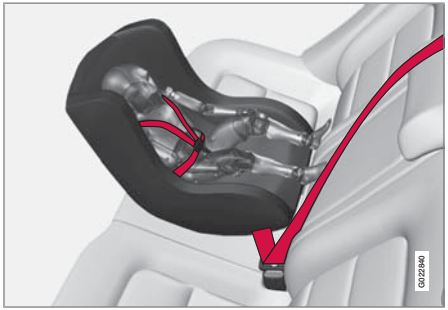

Infant seat

There are three main types of child restraint systems: infant seats, convertible seats, and booster cushions. They are classified according to the child's age and size.

The following section provides **general information** on securing a child restraint using a three-point seat belt. Refer to page 42–43 for information on securing a child restraint using ISOFIX lower anchors and/or top tether anchorages.

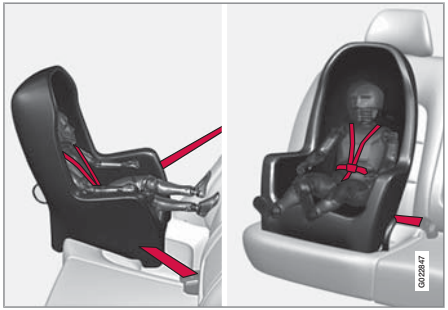

Convertible seat

WARNING

A child seat should never be used in the front passenger seat of any vehicle with a front passenger airbag – not even if the "Passenger airbag off" symbol near the rear-view mirror is illuminated (on vehicles equipped with Occupant Weight Sensor). If the severity of an accident were to cause the airbag to inflate, this could lead to serious injury or death to a child seated in this position.

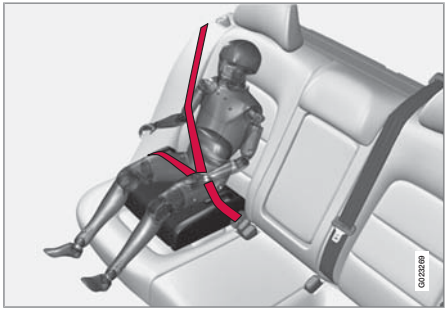

Booster cushion

WARNING

Always refer to the child restraint manufacturer's instructions for detailed information on securing the restraint.

Child restraint systems

WARNING

- When not in use, keep the child restraint system secured or remove it from the passenger compartment to help prevent it from injuring passengers in the event of a sudden stop or collision.
- A small child's head represents a considerable part of its total weight and its neck is still very weak. Volvo recommends that children up to age 4 travel, properly restrained, facing rearward. In addition, Volvo recommends that children should ride rearward facing, properly restrained, as long as possible.

Securing an infant seat with a seat belt

Do not place the infant seat in the front passenger's sea

NOTE

Refer to page 42–43 for information on securing a child restraint using ISOFIX lower anchors and/or top tether anchorages.

1. Place the infant seat in the rear seat of the vehicle.
2. Attach the seat belt to the infant seat according to the manufacturer's instructions.

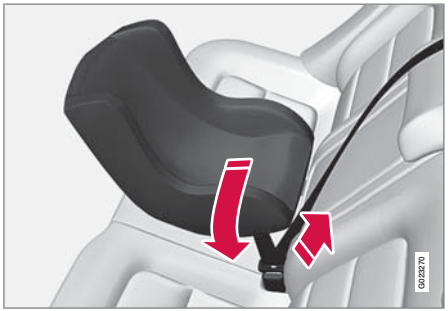

Positioning the seat belt through the infant seat

WARNING

- An infant seat must be in the rear-facing position only.
- The infant seat should not be positioned behind the driver's seat unless there is adequate space for safe installation.

WARNING

A child seat should never be used in the front passenger seat of any vehicle with a front passenger airbag – not even if the "Passenger airbag off" symbol near the rear-view mirror is illuminated (on vehicles equipped with Occupant Weight Sensor). If the severity of an accident were to cause the airbag to inflate, this could lead to serious injury or death to a child seated in this position.

3. Fasten the seat belt by inserting the latch plate into the buckle (lock) until a distinct click is audible.

Fasten the seat belt

Infant seats

Pull out the shoulder section of the seat belt

4. Pull the shoulder section of the seat belt out as far as possible to activate the belt's automatic locking function.

NOTE

The locking retractor will automatically release when the seat belt is unbuckled and allowed to retract fully.

5. Press the infant seat firmly in place, let the seat belt retract and pull it taut. A sound from the seat belt retractor's automatic locking function will be audible at this time and is normal. The seat belt should now be locked in place.

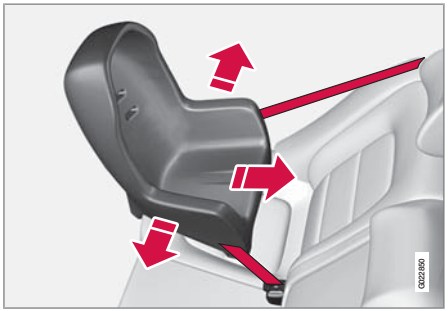

Ensure that the seat is securely in place

6. Push and pull the infant seat to ensure that it is held securely in place by the seat belt.

WARNING

It should not be possible to move the child restraint more than 1 in. (2.5 cm) in any direction.

The infant seat can be removed by unbuckling the seat belt and letting it retract completely.

Securing a convertible seat with a seat belt

Do not place the convertible seat in the front passenger's seat

NOTE

Refer to pages 42 and 43s for information on securing a child restraint using ISO-FIX lower anchors and/or top tether anchorages.

Convertible seats can be used in either a forward or rearward-facing position, depending on the age and size of the child.

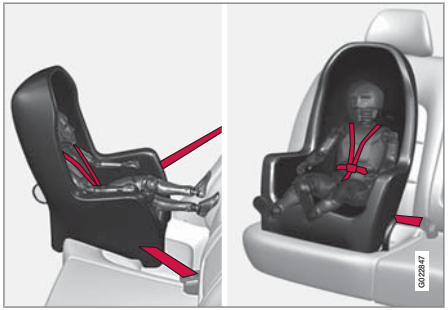

Route the seat belt through the convertible seat

WARNING

Always use a convertible seat that is suitable for the child's age and size. See the convertible seat manufacturer's recommendations.

1. Place the convertible seat in the rear seat of the vehicle.

WARNING

- A small child's head represents a considerable part of its total weight and its neck is still very weak. Volvo recommends that children up to age 4 travel, properly restrained, facing rearward. In addition, Volvo recommends that children should ride rearward facing, properly restrained, as long as possible.
- Convertible child seats should be installed in the rear seat only.
- A rear-facing convertible seat should not be positioned behind the driver's seat unless there is adequate space for safe installation.

2. Attach the seat belt to the convertible seat according to the manufacturer's instructions.

Convertible seats

Fasten the seat belt

3. Fasten the seat belt by inserting the latch plate into the buckle (lock) until a distinct click is audible.
4. Pull the shoulder section of the seat belt out as far as possible to activate the belt's automatic locking function.

NOTE

The locking retractor will automatically release when the seat belt is unbuckled and allowed to retract fully.

5. Press the convertible seat firmly in place, let the seat belt retract and pull it taut. A sound from the seat belt retractor's automatic locking function will be audible at this time and is normal. The seat belt should now be locked in place.

Pull out the shoulder section of the seat belt

6. Push and pull the convertible seat to ensure that it is held securely in place by the seat belt.

WARNING

It should not be possible to move the child restraint more than 1 in. (2.5 cm) in any direction.

The convertible seat can be removed by unbuckling the seat belt and letting it retract completely.

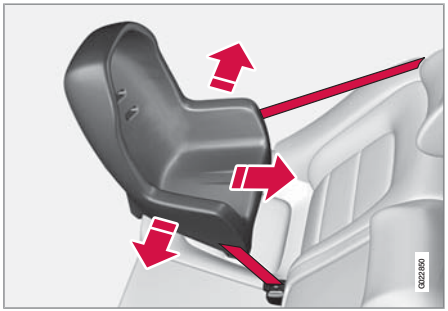

Ensure that the seat is securely in place

WARNING

A child seat should never be used in the front passenger seat of any vehicle with a front passenger airbag – not even if the "Passenger airbag off" symbol near the rear-view mirror is illuminated (on vehicles equipped with Occupant Weight Sensor). If the severity of an accident were to cause the airbag to inflate, this could lead to serious injury or death to a child seated in this position.

Securing a booster cushion

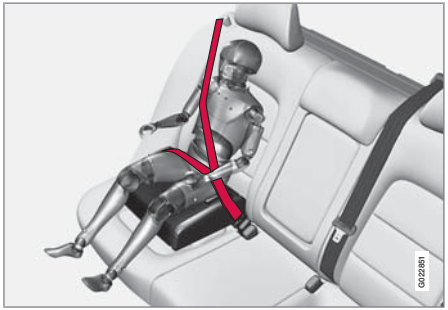

Position the child correctly on the booster cushion

Booster cushions are recommended for children who have outgrown convertible seats.

1. Place the booster cushion in the rear seat of the vehicle.
2. With the child properly seated on the booster cushion, attach the seat belt to or around the cushion according to the manufacturer's instructions.
3. Fasten the seat belt by inserting the latch plate into the buckle (lock) until a distinct click is audible.

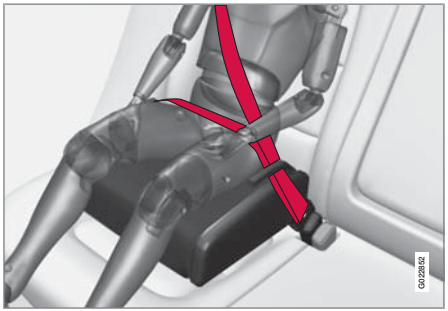

Positioning the seat belt

4. Ensure that the seat belt is pulled taut and fits snugly around the child.

WARNING

- The hip section of the three-point seat belt must fit snugly across the child's hips, not across the stomach.
- The shoulder section of the three-point seat belt should be positioned across the chest and shoulder.
- The shoulder belt must never be placed behind the child's back or under the arm.

ISOFIX lower anchors

Using the ISOFIX lower child seat anchors

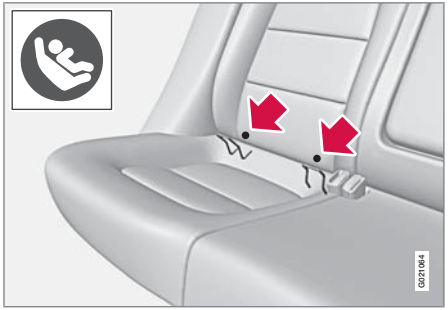

ISOFIX lower child restraint anchors

Lower anchors for ISOFIX-equipped child seats are located in the rear, outboard seats, hidden below the backrest cushions. Symbols on the seat back upholstery mark the anchor positions as shown. To access the anchors, kneel on the seat cushion and locate the anchors by feel. Always follow your child seat manufacturer's installation instructions, and use both ISOFIX lower anchors and top tethers whenever possible.

To access the anchors

1. Put the child restraint in position.
2. Kneel on the child restraint to press down the seat cushion and locate the anchors by feel.
3. Fasten the attachment on the child restraint's lower straps to the ISOFIX lower anchors.
4. Firmly tension the lower child seat straps according to the manufacturer's instructions.

NOTE

- The rear seat's center position is not equipped with ISOFIX lower anchors. When installing a child restraint in this position, attach the restraint's top tether strap (if it is so equipped) to the top tether anchorage point and secure the restraint with the vehicle's center seat belt.
- Always follow your child seat manufacturer's installation instructions, and use both ISOFIX lower anchors and top tethers whenever possible.

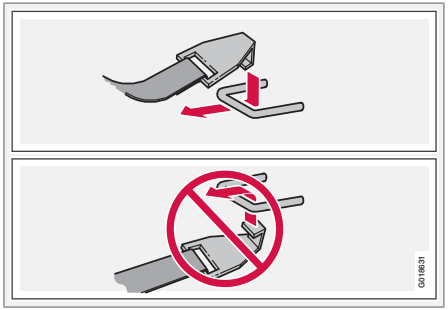

Fasten the attachment correctly to the ISOFIX lower anchors

WARNING

- Be sure to fasten the attachment correctly to the anchor (see the illustration). If the attachment is not correctly fastened, the child restraint may not be properly secured in the event of a collision.
- The ISOFIX lower child restraint anchors are only intended for use with child seats positioned in the outboard seating positions. These anchors are not certified for use with any child restraint that is positioned in the center seating position. When securing a child restraint in the center seating position, use only the vehicle's center seat belt.

Child restraint anchorages

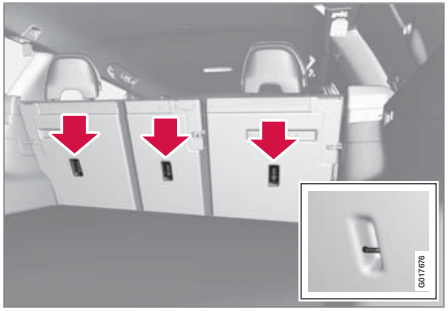

Your Volvo is equipped with child restraint top tether anchorages in the rear seat. They are located on the rear side of the backrests.

Securing a child seat

1. Place the child restraint on the rear seat.
2. Route the top tether strap under the head restraint and attach it to the anchor.
3. Attach lower tether straps to the lower ISO-FIX/LATCH anchors. If the child restraint is not equipped with lower tether straps, or the restraint is used in the center seating position, follow instructions for securing a child restraint using the Automatic Locking Retractor seat belt (see page 34).
4. Firmly tension all straps.

Refer also to the child seat manufacturer's instructions for information on securing the child seat.

NOTE

On models equipped with the optional cargo area cover, this cover should be removed before a child seat is attached to the child restraint anchors, see page 208

WARNING

- Never route a top tether strap over the top of the head restraint. The strap should be routed beneath the head restraint.
- Child restraint anchorages are designed to withstand only those loads imposed by correctly fitted child restraints. Under no circumstances are they to be used for adult seat belts or harnesses. The anchorages are not able to withstand excessive forces on them in the event of collision if full harness seat belts or adult seat belts are installed to them. An adult who uses a belt anchored in a child restraint anchorage runs a great risk of suffering severe injuries should a collision occur.
- Do not install rear speakers that require the removal of the top tether anchors or interfere with the proper use of the top tether strap.

Child restraint registration and recalls

Registering a child restraint

Child restraints could be recalled for safety reasons. You must register your child restraint to be reached in a recall. To stay informed about child safety seat recalls, be sure to fill out and return the registration card that comes with new child restraints.

Child restraint recall information is readily available in both the U.S. and Canada. For recall information in the U.S., call the U.S. Government's Auto Safety Hotline at 1-800-424-9393. In Canada, visit Transport Canada's Child Safety website at http://www.tc.gc.ca/roadsafety/childsafety/menu.htm.

Integrated two-stage booster cushion (option)[1]

Volvo's optional integrated booster cushions are located in the outboard seating positions. These booster cushions have been specially designed to help safeguard children in the rear seat. They should be stowed (folded down into the seat cushion) when not in use. When using an integrated booster cushion, the child must be secured with the vehicle's three-point seat belt.

Use these booster cushions only with children whose weight is between:

- Stage 1: 48 – 80 lbs (22 – 36 kg)
- Stage 2: 33 – 55 lbs 15 – 25 kg

and whose height is between:

- Stage 1: 45 – 55 in. (115 – 140 cm)
- Stage 2: 37 – 47 in. (95 – 120 cm)

In Canada, Transport Canada's weight recommendation is 40 – 80 lbs (18 – 36 kg).

The booster cushions are designed to raise the child higher, so that the shoulder strap crosses over the child's collarbone, not over the child's neck. If using a booster cushion does not result in proper positioning of the shoulder strap, then the child should be placed in a properly secured child restraint (see page 35). The shoulder belt must never be placed behind the child's back or under the arm.

Correct seating position: child's head is below the head restraint and the shoulder belt is across the collarbone

Incorrect seating position: the child's head is above the head restraint and the shoulder belt is not across the collarbone

Before driving, check that:

- The integrated two-stage booster cushion is set in the correct position for according to the child's height and weight (see the table below) and is locked in position.

	Stage 1	Stage 2
Weight	48 – 80 lbs 22 – 36 kg	33 – 55 lbs 15 – 25 kg
Height	45 – 55 in. 115 – 140 cm	37 – 47 in. 95 – 120 cm

[1] Canada only: This cushion may be referred to as a built-in booster cushion.

Integrated booster cushion

- That the seat belt is properly positioned and is taut.
- The shoulder section of the seat belt is across the child's collarbone, not over the neck.
- The lap section of the seat belt is across the child's hips and not the abdomen.

Using an integrated booster cushion

Stage 1

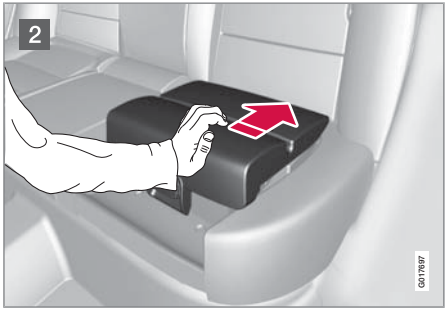

1 Pull the handle (1) forward and upward (2) to release the booster cushion.

2 Press the booster cushion rearward to lock it in position.

Stage 2

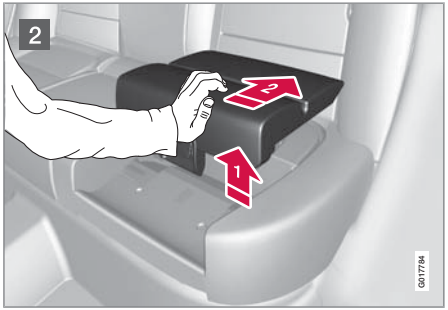

1 With the booster cushion in the stage 1 position, press the button (see the arrow in illustration 1).

2 Lift the front edge of the booster cushion and press it rearward toward the backrest to lock it in position.

Stowing the two-stage integrated booster cushion

The booster cushion can be folded down completely (stowed) from either the stage 1 or stage 2 positions.

NOTE

The booster cushion cannot be moved from the stage 2 (upper) position to the stage 1 (lower) position. It must first be folded down completely to the stowed position, and then adjusted to stage 1.

1. Pull the handle forward to release the booster cushion.
2. Press down on the center of the booster cushion to return it to the stowed position.

NOTE

The booster cushion must be in the stowed position before the rear seat backrests are folded down.

CAUTION

Be sure there are no loose objects under the booster cushion before it is stowed.

WARNING

DEATH or SERIOUS INJURY can occur

Follow all instructions on the booster cushion and in the vehicle's owner's manual.

MAKE SURE THE BOOSTER CUSHION IS SECURELY LOCKED BEFORE THE CHILD IS SEATED.

- Use this booster cushion only with children whose height and weight are within the permitted limits shown in the table see page 45.
- In the event of a collision while the integrated booster cushion was occupied, the entire booster cushion and seat belt must be replaced. The booster cushion should also be replaced if it is badly worn or damaged in any way. This work should be performed by a trained and qualified Volvo service technician only.

Child safety locks

Child safety locks

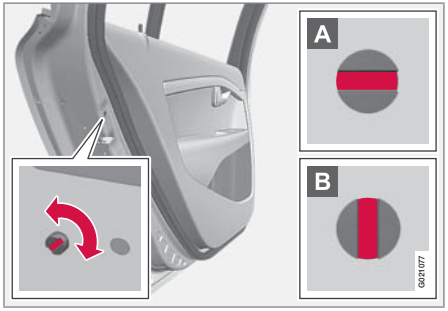

Manual child safety locks – rear doors

The controls are located on the rear door jambs. Use the remote control's key blade or a screwdriver to adjust these controls.

A The rear doors can only be opened from the outside when the slot is in the horizontal position.

B The rear doors can be opened from the inside when the slot is in the vertical position.

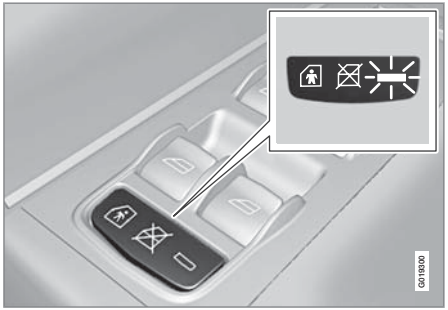

Power child safety locks (option on certain markets)

The power child lock function can be activated by pressing the button shown in the inset illustration above. The ignition must be in mode **I** or **II** (see page 77).

When the function is activated, a message will appear in the information display and the indicator light in the button will light up.

With the function activated:

- The rear door windows can only be opened with the control in the driver's door.
- The rear doors cannot be opened from the inside.

NOTE

There are no manual child safety locks on vehicles equipped with the optional power child safety locks.

WARNING

Remember, in the event of an accident, the rear seat passengers cannot open the doors from the inside with the controls in position A (manual child safety locks) or if the power child safety lock function is activated.

Remote key and key blade..... 52
Private locking 59
Keyless drive..... 60
Locks..... 63
Alarm..... 65

LOCKS AND ALARM

02

Remote key and key blade

Introduction

Two remote keys or optional Personal Car Communicators (PCC) are provided with your vehicle. They enable you to unlock the doors and tailgate, and also function as ignition keys to start the vehicle or operate electrical components. The remote keys contain detachable metal key blades for manually locking or unlocking the driver's door and the glove compartment. Up to six remotes can be programmed for use on the same vehicle.

The PCCs have enhanced functionality compared with the standard remote control.

NOTE

In the remainder of this chapter, all references to the remote key also pertain to the PCC unless otherwise stated.

WARNING

Never leave the remote key in the ignition if children are to remain in the vehicle.

Detachable key blade

Each remote key or PCC contains a detachable metal key blade for mechanically locking or unlocking the driver's door and the glove compartment, and to enable the private locking function. See page 57 for more information on the key blade and page 59 for information on the private locking function. The key blades have a unique code, which is used if new ones need to be produced. This code is available at an authorized Volvo retailer.

Loss of a remote key

If a remote key is lost, the other one must be taken with the vehicle to a trained and qualified Volvo service technician. As an anti-theft measure, the code of the lost remote must be erased from the system.

The number of registered keys for the vehicle can be found in the vehicle's menu under **Car settings ➔ Car key memory ➔ Number of keys**. See page 120 for a description of the menu system.

USA-5WK49264

FCC ID:KR55WK49264 + Siemens VDO 5WK49236

FCC ID:KR55WK49236, 5WK49266

FCC ID:KR55WK49266 + Siemens VDO 5WK49233

FCC ID:KR55WK49233

This device complies with part 15 of the FCC rules and RSS-210. Operation is subject to the following conditions: (1) This device may not cause harmful interference, and (2) this device must accept any interference received, including interference that may cause undesired operation.

Canada-5WK49264

IC:267T-5WK49264 + Siemens VDO 5WK49236

IC:267T-5WK49236, 5WK49266

IC:267T-5WK49266 + Siemens VDO 5WK49233

IC:267T-5WK49233

Operation is subject to the following conditions: (1) this device may not cause interference, and (2) this device must accept any interference, including interference that may cause undesired operation of the device.

Key memory – door mirrors and driver's seat

The position of the side door mirrors and optional power driver's seat are stored in the remote keys when the vehicle is locked. The next time the driver's door is unlocked with the same remote key and the door is opened within 2 minutes, the power driver's seat and side door mirrors will automatically move to the position that they were in when the doors were most recently locked with the same remote key. See page 80 for more information.

This feature can be activated or deactivated in the vehicle's menu under **Car settings ➔ Car key memory ➔ Seat & mirror positions**. See page 120 for a description of the menu system.

See also page 60 for information regarding vehicles with the optional keyless drive.

Confirmation when locking/unlocking the vehicle

When the vehicle is locked with a remote key, the turn signals will flash once to confirm that this has been completed correctly.

When the vehicle is locked, confirmation will only be given if all of the locks are locked after the doors have been closed.

NOTE

If you do not receive confirmation when locking the vehicle, check whether a door or the tailgate is ajar, or if this feature has been turned off in the menu.

This function can be activated or deactivated under **Car settings ➔ Light settings ➔ Lock confirmation, light**, or **Car settings ➔ Light settings ➔ Unlock confirmation, light**. See page 120 for a description of the menu system.

Immobilizer (start inhibitor)

Each of the keys supplied with your vehicle contains a coded transponder. The code in the key is transmitted to an antenna in the ignition slot where it is compared to the code stored in the start inhibitor module. The vehicle will start only with a properly coded key. If you misplace a key, take the other keys to a trained and qualified Volvo service technician for reprogramming as an antitheft measure. The following messages (which may appear in the instrument panel display) are related to the immobilizer:

Message	Meaning
Key error Reinsert key	Remote key not recognized during start. Try to start the vehicle again.
Car key Not found	PCC with keyless drive only. Remote key not recognized during start. Try to start the vehicle again.
Immobilizer See manual	Remote key fault during start. Contact an authorized Volvo workshop.

CAUTION

Never use force when inserting the remote key in the ignition slot. The vehicle cannot be started if the transponder is damaged.

USA–FCC ID: LTQWFS 125VO

This device complies with part 15 of the FCC rules. Operation is subject to the following condition: (1) This device may not cause harmful interference, and (2) this device must accept any interference received, including interference that may cause undesired operation.

Remote key and key blade

Canada–IC: 3659A-WFS125VO

Operation is subject to the following conditions: (1) this device may not cause interference, and (2) this device must accept any interference, including interference that may cause undesired operation of the device.

See page 103 for information on starting the vehicle.

Replacing the battery in the remote key

The batteries should be replaced if:

- The information symbol illuminates and **Replace car key battery** is shown in the display and/or
- if the locks do not react after several attempts to unlock or lock the vehicle.

NOTE

The remote key's range is normally approximately 60 ft (20 m) from the vehicle.

See page 57 for information on replacing the battery.

Common functions – Remote key/ Personal Car Communicator (PCC)

Remote key

Personal Car Communicator (PCC)—option

Lock

Unlock

Approach lighting

Tailgate unlock/open

Panic alarm

Buttons on the remote

Lock – Press the Lock button on the remote once to lock all doors and the tailgate. The turn signals will flash once to confirm locking.

Unlock – Press the Unlock button on the remote once to unlock the driver's door. The turn signals will flash twice to confirm unlocking.

After a short pause, press the Unlock button a second time within 10 seconds to unlock the other doors and the tailgate.

This function can be changed so that all doors unlock at the same time under **Car settings ➔ lock settings ➔ Doors, unlock**. See page 120 for a description of the menu system.

Approach lighting – As you approach the vehicle, press the button on the remote control to light the interior lighting, parking lights, license plate lighting and the lights in the door mirrors (option).

These lights will switch off automatically after 30, 60 or 90 seconds, see page 120 for more information.

Unlock tailgate – Press the button once to disarm the alarm system and optional movement sensor (the alarm indicator light on the dashboard will go out), and unlock only the tailgate.

NOTE

- This function also opens the tailgate on models equipped with the optional power tailgate.
- As an added safety precaution, the parking lights will come on automatically for a short period when the tailgate has been opened.

After closing, the tailgate will not automatically relock. Press Lock to relock it and rearm the alarm.

See also page 64 for information on unlocking the tailgate from the passenger compartment.

Panic alarm – This button can be used to attract attention during emergency situations.

To activate the panic alarm, press and hold this button for at least 3 seconds or press it twice within 3 seconds. The turn signals and horn will be activated. The panic alarm will stop automatically after 2 minutes and 45 seconds.

To deactivate, wait approximately 5 seconds and press the button again.

These lights will switch off automatically after 30, 60 or 90 seconds, see page 120 for more information.

The Panic alarm button will not unlock the vehicle.

Range

The remote key has a range of approximately 60 ft. (20 m) from the vehicle.

NOTE

Buildings or other obstacles may interfere with the function of the remote key. The vehicle can also be locked or unlocked with the key blade, see page 57.

Functions – PCC

1 Information button

2 Indicator lights

Pressing the information button 1 provides certain information about the vehicle with the help of the indicator lights 2.

Using the information button

1. Press the information button [i].
2. All of the indicator lights will flash sequentially for approximately 7 seconds to indicate that the PCC is receiving information from the vehicle. If any of the buttons are pressed during this 7-second period, transmission of information to the PCC will be interrupted.

Remote key and key blade

NOTE

If none of the indicator lights flash when the information button has been pressed several times from different places in relation to the vehicle, contact an authorized Volvo service technician.

The indicator lights 2 provide information according to the illustration:

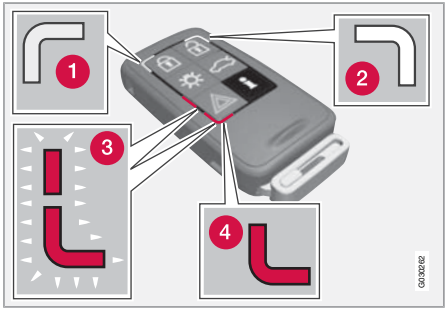

1. Steady green light: the vehicle is correctly locked.
2. Steady yellow light: the vehicle is not locked.
3. Alternatively flashing red lights (Heartbeat sensor): if the two heartbeat sensor lights flash, this indicates that someone may be inside the vehicle. These lights are only activated if the alarm has been triggered.
4. Steady red light: the alarm has been triggered.

Range

The PCC's lock and unlock functions have a range of approximately 60 ft. (20 m) from the vehicle.

NOTE

- The approach lighting, panic alarm, and the functions controlled by the information button have a range of approximately 300 ft (100 m) from the vehicle.
- Buildings or other obstacles may interfere with the function of the PCC.

Outside of the PCC´s range

If the PCC is more than approximately 300 ft (100 m) from the vehicle when the information button is pressed, no new information will be received. The PCC most recently used to lock or unlock the vehicle will show the vehicle's most recently received status. The indicator lights will not flash when the information button is pressed while the PCC is out of range.

If more than one PCC is used to lock/unlock the vehicle, only the one used most recently will show the correct locking status.

NOTE

If none of the indicator lights illuminate when the information button is pressed, this may be because the most recent transmission between the vehicle and the PCC was interrupted or impeded by buildings or other objects.

Heartbeat Sensor

The heartbeat sensor function 3 is a complement to the vehicle's standard alarm, and indicates at a distance of up to 300 ft (100 m) that someone may be in the vehicle. The heartbeat sensor only functions if the alarm has been triggered.

NOTE

The heartbeat sensor registers a person's heartbeat in the form of vibrations in the vehicle's chassis. For this reason, the sensor's function may be impaired in areas with high levels of noise or vibrations.

Keyless drive

Vehicles equipped with the optional Personal Car Communicator have the keyless drive

function, see page 60 for detailed information.

Detachable key blade

The key blade can be removed from the remote control. When removed, the key blade can be used as follows:

- To lock/unlock the driver's door
- To lock/unlock the glove compartment (see page 63)
- To enable/disable the private locking function (see page 59)

Unlocking the doors with the detached key blade

Insert the key blade as far as possible in the driver's door lock. Turn the key blade clockwise approximately one-quarter turn to unlock the driver's door only.

NOTE

After unlocking the driver's door with the key blade, opening the door will trigger the alarm.

To disable the alarm:

Insert the remote key in the ignition slot.

Locking the doors with the detached key blade

1. Lock the rear doors and the front passenger's door by pressing the lock button on each door.
2. Turn the key blade one-quarter turn counter-clockwise to lock the driver's door.

Removing the key blade

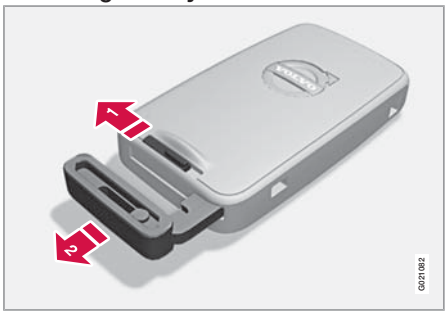

1 Slide the spring loaded catch to the side.

2 Pull the key blade straight out of the remote control.

Reinserting the key blade in the remote control

1. Hold the remote control with the slot for the key blade up.
2. Carefully slide the key blade into its groove.
3. Gently press the key blade in the groove until it clicks into place.

Replacing batteries in the remote key/PCC

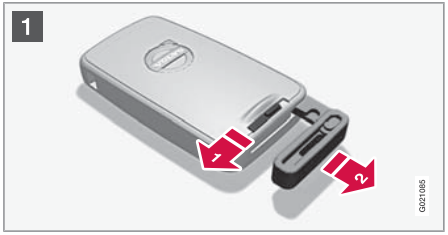

Remote key and key blade

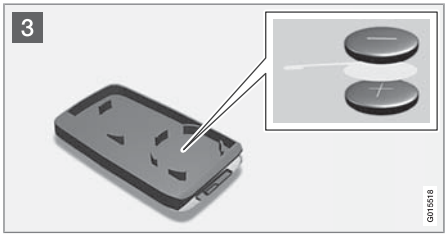

Battery type CR 2430, 3 V (one battery in the remote key, two batteries in the PCC)

Opening the remote key/PCC

1 1 Slide the spring loaded catch to the side.

2 Pull the key blade straight out of the remote control.

2 3 Insert a small screwdriver in the hole behind the spring loaded catch and carefully pry up the cover.

NOTE

Turn the remote key with the buttons upward so that the batteries do not fall out when the cover is removed.

Replacing the batteries

CAUTION

When handling batteries, avoid touching their contact surfaces as this could result in poor battery function in the remote key.

3 Note the position of the battery's (+) or (–) sides.

Remote key

1. Use a screwdriver to pry out the old battery.
2. Insert a new one with the + side downward.

PCC

1. Use a screwdriver to pry out the old batteries.
2. Insert the first new battery with the + side upward.
3. Insert the plastic spacer over the battery. Insert the second new battery on top of the plastic spacer, with the + side downward.

Re-assembling the remote key

1. Press the remote key's cover into place.
2. Hold the remote control with the slot for the key blade up.
3. Carefully slide the key blade into its groove.
4. Gently press the key blade in the groove until it clicks into place.

Old batteries should be properly recycled.

Tailgate compartment

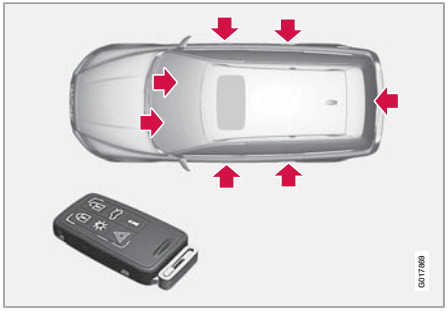

Normal locking/unlocking points

Locking/unlocking points with private locking activated.

By utilizing the remote key with the key blade removed, the private locking feature enables you to block access to the glove compartment and disconnect the tailgate from the central locking system for e.g., valet parking or when the vehicle is brought to the retailer for service.

With the private locking function activated:

- The vehicle's doors can be locked or unlocked with the remote
- The engine can be started
- The glove compartment cannot be unlocked
- The tailgate cannot be unlocked or opened with the remote
- The rear floor hatch cannot be opened

Activating the private locking function

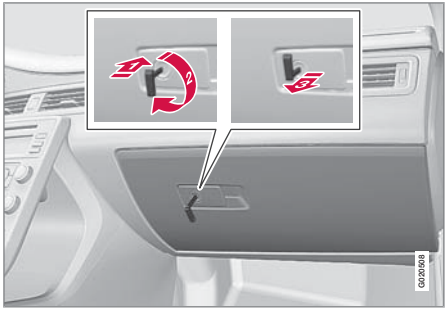

1. Insert the key blade in the glove compartment lock.
2. Turn the key blade180 degrees clockwise.
3. Remove the key blade from the lock. A message will appear in the instrument panel display.

Deactivating the private locking function

Turn the key blade 180 degrees counterclockwise in the glove compartment lock to deactivate private locking.

See page 63 for information on locking the glove compartment normally, without activating the private locking function.

Keyless drive

Keyless drive (models with Personal Car Communicator only)

Keyless locking and unlocking

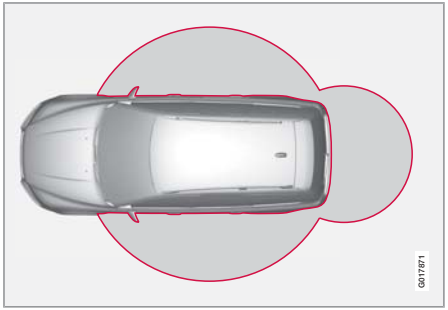

Range of the keyless drive remote control–5 ft (1.5 meters)

This system makes it possible to unlock and lock the vehicle without having to press any buttons on the Personal Car Communicators (PCC). It is only necessary to have a keyless drive remote control in your possession to operate the central locking system.

NOTE

The buttons on the keyless drive remote control can also be used to lock and unlock the vehicle, see page 54 for more information.

Both of the PCCs provided with the vehicle have the keyless function, and additional ones can be ordered. The system can accommodate up to six PCCs.

The red rings in the illustration indicate the area around the vehicle covered by the keyless drive antennas.

Unlocking the vehicle

- A keyless drive remote control must be on the same side of the vehicle as the door to be opened, and be within 5 feet (1.5 meters) of the lock or the tailgate (see the shaded areas in the illustration).
- Pull a door handle to unlock and open the door or pull the tailgate opening control.

The number of doors that are unlocked at the same time can be set in the vehicle's menu system, under **Car settings ➔ Lock settings ➔ Keyless entry**. See page 120 for a description of the menu system.

NOTE

If the PCC does not function normally (weak battery, etc.), the vehicle can be unlocked with the detachable key blade, see page 52.

Locking the vehicle

The doors and the tailgate can be locked by pressing the lock button in any of the outside door handles.

NOTE

On keyless drive vehicles, the gear selector must be in the Park (**P**) position, all doors and the tailgate must be closed and the ignition must be switched off before the vehicle can be locked.

Keyless drive remote control and driver's seat/door mirror memory

- When you leave the vehicle with a PCC in your possession and lock any door, the position of the driver's seat will be stored in the seat's memory.
- The next time a door is opened by a person with the same PCC in his/her possession, the driver's seat and door mirrors will automatically move to the position that they were in when the door was most recently locked.

NOTE

If several people carrying PCCs approach the vehicle at the same time, the driver's seat and door mirrors will assume the positions they were in for the person who opens the driver's door.

See also page 80 for information on adjusting and storing the seat's position in the seat memory.

Keyless drive information messages

If all of the PCCs are removed from the vehicle while the engine is running or if the ignition is in mode **II** and all of the doors are closed, a message will appear in the instrument panel display and an audible signal will sound.

When at least one PCC has been returned to the car, the message will be erased in the display and the audible signal will stop when:

- A door has been opened and closed
- The PCC has been inserted in the ignition slot
- The **READ** button (see page 121 for the location of this button) has been pressed.

CAUTION

- Keyless drive remote controls should never be left in the vehicle. In the event of a break-in, a remote found in the vehicle could make it possible to start the engine.
- Electromagnetic fields or metal obstructions can interfere with the keyless drive system. Avoid placing the remote control near cellular phones, metallic objects or e.g., in a metal briefcase.

USA – FCC ID:KR55WK48952, KR55WK48964

NOTE

This device complies with part 15 of the FCC Rules. Operation is subject to the following two conditions: (1) This device may not cause harmful interference, and (2) this device must accept interference received, including interference that may cause undesired operation.

CAUTION

Changes or modifications not expressly approved by the manufacturer could void the user's authority to operate the equipment.

Siemens VDO

5WK48891

Tested To Comply With FCC Standards

For Automobile Use

Canada – IC:267T-5WK48952, 267T-5WK48964, 267T-5WK48891

NOTE

This device complies with RSS -210 of Industry Canada. Operation is subject to the following two conditions: (1) This device may not cause harmful interference, and (2) this device must accept interference received, including interference that may cause undesired operation.

CAUTION

Changes or modifications not expressly approved by the manufacturer could void the user's authority to operate the equipment.

Keyless drive

Location of the keyless drive antennas

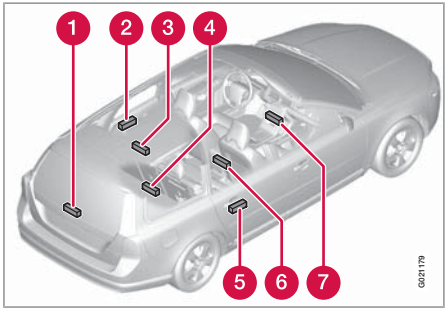

The keyless drive system has a number of antennas located at various points in the vehicle.

1. On the tailgate, near the wiper motor
2. Left rear door handle
3. Ceiling, above the center of the rear seat
4. Under the floor of the cargo area, near the rear seat
5. Right rear door handle
6. Under the rear section of the center console
7. Under the front section of the center console.

WARNING

People with implanted pacemakers should not allow the pacemaker to come closer than 9 inches (22 cm) to any of the keyless drive system's antennas. This is to help prevent interference between the pacemaker and the keyless drive system.

Locking and unlocking the vehicle

From outside the vehicle

The remote key locks all of the doors and the tailgate.

The first press on the unlock button unlocks the driver's door and a second press unlocks the other doors and the tailgate (see also page 54).

NOTE

The vehicle cannot be locked if a door is open.

From inside the vehicle

The lock buttons on the door panel can be used to lock or unlock all doors and the tailgate at the same time.

Unlocking

– Press the unlock button.

Locking

– Press the lock button after the front doors have been closed.

- Each door can be locked individually with the lock button on the respective doors. The door must be closed first.
- The door can be unlocked by pulling the door handle once and opened by pulling the handle again.

Automatic relocking

If the doors are unlocked, the locks will automatically reengage (re-lock) and the alarm will rearm after 2 minutes unless a door or the tailgate has been opened.

Automatic locking

When the vehicle starts to move, the doors and tailgate can be locked automatically. This feature can be turned on or off under **Car settings ➔ Lock settings ➔ Doors automatic lock**. See page 120 for a description of the menu system.

Glove compartment

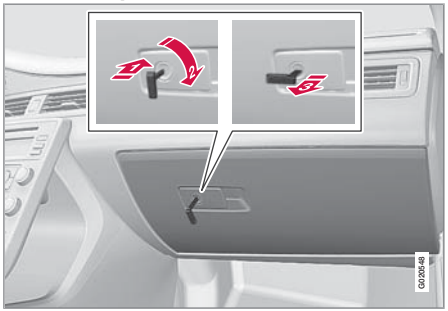

1. The glove compartment can only be locked and unlocked using the detachable key blade in the remote key. See page 57 for information on removing the key blade from the remote key. Insert the key blade in the glove compartment lock.
2. Turn the key blade 90 degrees clockwise.
3. Remove the key blade from the lock.

Locks

Locking/unlocking the tailgate

Tailgate unlock button on the remote key

Unlocking the tailgate with the remote key

– Press the tailgate unlock button on the remote key to unlock (but not open[1]) the tailgate. See also page 54.

  > The alarm indicator light on the dashboard will go out to indicate that the alarm is not monitoring the entire vehicle. The accessory movement and inclination sensors will be automatically disconnected.

NOTE

- If the doors are locked while the tailgate is open, the tailgate will remain unlocked until the vehicle is relocked by pressing the Lock button on the remote control.
- On keyless drive vehicles, the gear selector must be in the Park (**P**) position, all doors and the tailgate must be closed and the ignition must be switched off before the vehicle can be locked.

Locking the tailgate with the remote key

– Press the lock button on the remote. See also page 54.

Unlocking the tailgate from the passenger compartment

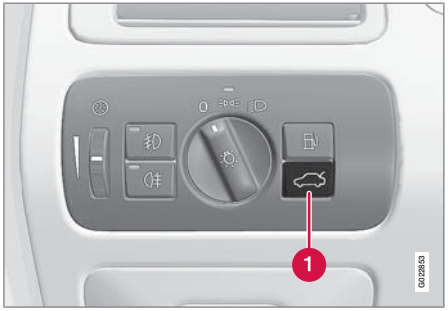

– Press the button on the lighting panel (1) to unlock (but not open[1]) the tailgate.

NOTE

The taillights will illuminate automatically for a short period when the tailgate has been opened.

[1] This button also opens, but does not close, the tailgate on models equipped with the optional power tailgate (see page 202).

The alarm system

The alarm is automatically armed whenever the vehicle is locked with the remote key or optional Personal Car Communicator.

When armed, the alarm continuously monitors a number of points on the vehicle. The following conditions will trigger the alarm:

- The hood is forced open.
- The tailgate is forced open.
- A door is forced open.
- The ignition slot is tampered with.
- An attempt is made to start the vehicle with a non-approved key (a key not coded to the car's ignition).
- If there is movement in the passenger compartment (if the vehicle is equipped with the accessory movement sensor).
- The vehicle is lifted or towed (if the vehicle is equipped with the accessory inclination sensor).
- The battery is disconnected (while the alarm is armed).
- The siren is disconnected when the alarm is disarmed.

A message will appear in the information display if a fault should occur in the alarm system. Contact an authorized Volvo service technician.

NOTE

Do not attempt to repair any of the components in the alarm system yourself. This could affect the insurance policy on the vehicle.

The alarm indicator light

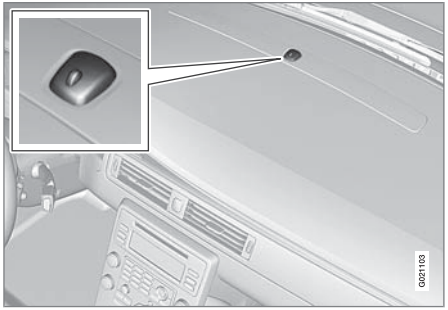

The status of the alarm system is indicated by the indicator light on the dashboard (see illustration):

- Indicator light off – the alarm is not armed
- The indicator light flashes at one-second intervals – the alarm is armed
- The indicator light flashes rapidly before the remote key is inserted in the ignition slot – the alarm has been triggered.

Arming the alarm

– Press the Lock button on the remote key. One long flash of the turn signals will confirm that the alarm is armed.

Alarm confirmation settings can be changed under **Car settings ➔ Lock settings ➔ Keyless entry**. See page 120 for a description of the menu system.

USA FCC ID: MAYDA 5823(3)

This device complies with part 15 of the FCC rules. Operation is subject to the following conditions: (1) This device may not cause harmful interference, and (2) this device must accept any interference received, including interference that may cause undesired operation.

Canada IC: 4405A-DA 5823(3)

Movement sensor DA5823 by Dynex Operation is subject to the following conditions: (1) this device may not cause interference, and (2) this device must accept any interference, including interference that may cause undesired operation of the device.

Alarm

Disarming the alarm

– Press the Unlock button on the remote key.
  > Two short flashes from the car's direction indicators confirm that the alarm has been deactivated and that all doors are unlocked.

Turning off (stopping) the alarm

If the alarm is sounding, it can be stopped by pressing the Unlock button on the remote control or by inserting the remote key in the ignition slot. Two short flashes from the car's direction indicators confirm that the alarm has been turned off.

Other alarm-related functions

Automatic re-arming

If the doors are unlocked, the locks will automatically reengage (re-lock) and the alarm will re-arm after 2 minutes unless a door or the tailgate has been opened.

Audible/visual alarm signal

- An audible alarm signal is given by a battery powered siren. The alarm cycle lasts for 30 seconds.
- The visual alarm signal is given by flashing all turn signals for approximately 5 minutes or until the alarm is turned off.

Remote key not functioning

If the remote key is not functioning properly, the alarm can be turned off and the vehicle can be started as follows:

1. Open the driver's door with the key blade. This will trigger the alarm.
2. Insert the remote key into the ignition slot. This will turn off the alarm.

Reduced alarm function

Turning off the accessory alarm sensors

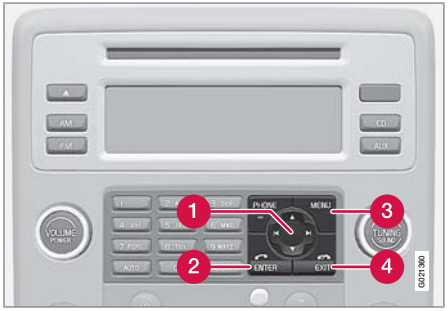

1. Navigation (left/rght/up/down) buttons
2. **ENTER**
3. **MENU**
4. **EXIT**

In certain situations it may be desirable to turn off the accessory inclination and movement alarm sensors if, for example, you drive your vehicle onto a ferry where the rocking of the boat could trigger the alarm or if a pet is left in the vehicle with the doors locked.

The vehicle's menu system is used for turning off these sensors (see page 120 for a description of the menu system).

1. Go into the menu under **Car settings**.
2. Select **Reduced guard** (Press **Enter** to choose).
3. Two alternatives are now available:
   - **Activate once**. If this alternative is selected, **Reduced guard–see manual** will appear in the instrument panel display and the accessory inclination and movement alarm sensors will be deactivated when the vehicle is locked.
   - **Ask on exit**. If this alternative is selected, the message **Press ENTER to reduce guard until engine is started—Press EXIT to cancel** will appear in the center console display each time the engine is turned off and the accessory inclination and movement alarm sensors will be deactivated when the vehicle is locked.

4. Press **ENTER** and lock the vehicle.

The next time the engine is started, the alarm system will be reset and **Full guard** will appear in the instrument panel display. The accessory inclination and movement alarm sensors will be reactivated.

In either of the alternatives, if you prefer not to deactivate the accessory inclination and movement alarm sensors, do not make a choice in the menu or press **EXIT** and lock the vehicle.

Instruments and controls..... 70
Ignition modes..... 77
Seats..... 79
Steering wheel..... 84
Lighting..... 85
Wipers and washers..... 91
Power windows..... 94
Mirrors..... 96
Power moonroof..... 98
HomeLink® Wireless Control System (option)..... 100
Starting the engine..... 103
Transmission..... 107
Brakes..... 110
Hill Descent Control (HDC)..... 112
Parking brake..... 114

G020912

YOUR DRIVING ENVIRONMENT

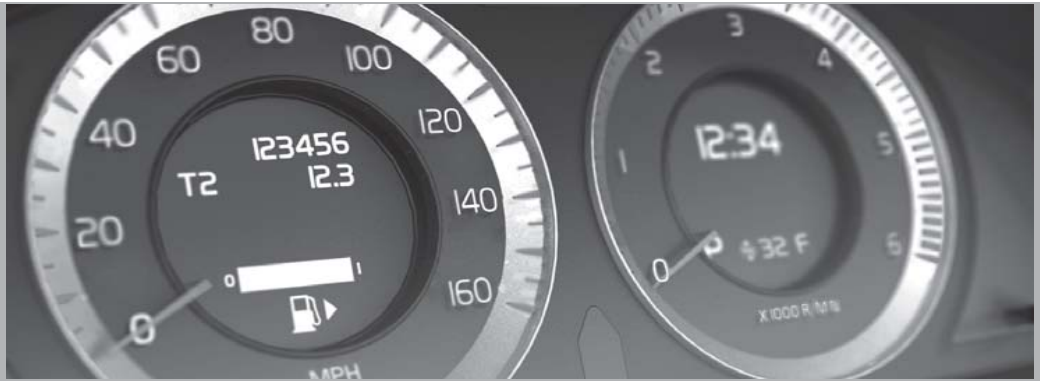

03

Instruments and controls

Instrument overview

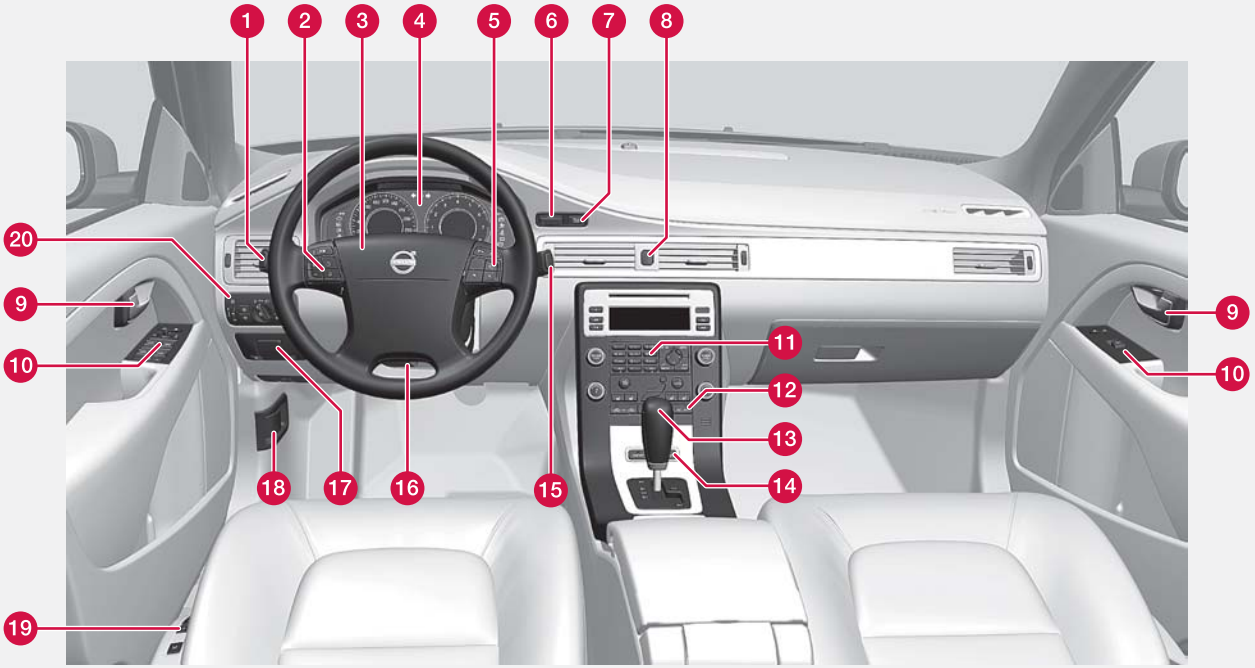

Instruments and controls

	Function	Page
1	Menus and messages, turn signals, high/low beams, trip computer	120, 88, 85, 152
2	Cruise control	158
3	Horn, airbag	84, 18
4	Main instrument panel	71
5	Menu system, audio controls	131
6	Ignition slot	77
7	START/STOP ENGINE button	77
8	Hazard warning flashers	87
9	Door handle	–
10	In-door control panels (power windows, mirrors, power child safety locks, central locking button)	94, 96, 48, 63

	Function	Page
11	Menu controls, audio and climate control systems	120, 134, 126
12	Center console buttons	120
13	Gear selector	107
14	Controls for active chassis (Four-C) - certain models only	157
15	Wipers and washers	91, 92
16	Steering wheel adjustment	84
17	Parking brake	114
18	Hood opening control	219
19	Seat adjustment controls	79
20	Lighting panel, buttons for opening fuel filler door and unlocking the tailgate	85, 200, 64

Information displays

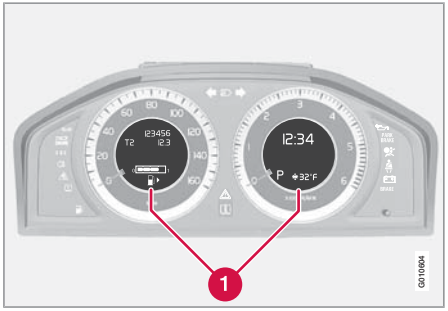

Information displays in the instrument panel

The information displays (1) show information on some of the vehicle's functions, such as cruise control, the trip computer and messages. The information is shown with text and symbols.

More detailed information can be found in the descriptions of the functions that use the information displays.

Instruments and controls

Gauges

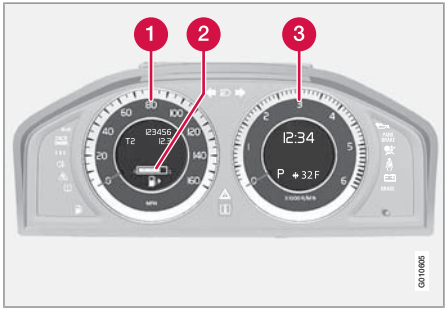

Gauges in the instrument panel

1. Speedometer
2. Fuel gauge. Please note that the fuel level indicator in the gauge moves from right to left as the amount of fuel in the tank decreases. See also the section on refueling beginning on page 198. See page 152 for more information on fuel level and consumption.
3. The tachometer shows engine speed in thousands of revolutions per minute (rpm). Do not drive continuously with the needle in the red area of the gauge. The engine management system will automatically prevent excessively high engines speeds. This will be noticeable as a pronounced unevenness in engine speed.

Indicator, information, and warning symbols

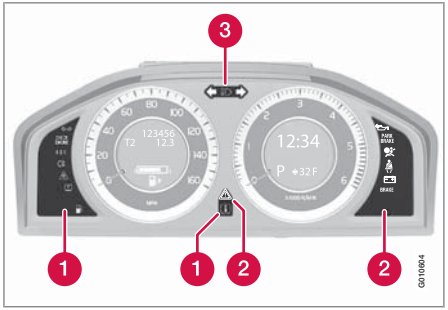

Indicator and warning symbols

1. Indicator and information symbols
2. Indicator and warning symbols
3. High beam and turn signal indicators

Function check

All indicator and warning symbols light up in ignition mode **II** or when the engine is started. When the engine has started, all the symbols should go out except the parking brake symbol, which only goes out when the brake is disengaged.

If the engine does not start or if the function check is carried out in ignition mode **II**, all symbols go out after 5 seconds except the symbol for faults in the vehicle's emissions system and the symbol for low oil pressure.

Certain symbols may not have their functions illustrated, depending on the vehicle's equipment.

Indicator and warning symbols

Symbol	Description
	Trailer turn signal indicator
CHECK ENGINE	Malfunction indicator light
ABS	Anti-lock brake system (ABS)
	Rear fog light on
	Stability system
	Tire pressure monitoring sensor (TPMS)
	Low fuel level
	Information symbol, see text in information display
	High beam indicator

Symbol	Description
	Left turn signal indicator
	Right turn signal indicator

Trailer turn signal indicator

If you are towing a trailer, this light will flash simultaneously with the trailer's turn signals. If the light does not flash, or if they flash faster than usual when signaling a turn, the turn signals on the trailer or on the vehicle are not functioning properly.

CHECK ENGINE Malfunction Indicator Light

As you drive, a computer called On-Board Diagnostics II (OBDII) monitors your vehicle's engine, transmission, electrical and emission systems.

The malfunction indicator (CHECK ENGINE) light will illuminate if the computer senses a condition that potentially may need correcting. When this happens, please have your vehicle checked by a trained and qualified Volvo service technician as soon as possible.

A malfunction indicator (CHECK ENGINE) light may have many causes. Sometimes, you may not notice a change in your car's behavior. Even so, an uncorrected condition could hurt fuel economy, emission controls, and drivability. Extended driving without correcting the cause could even damage other components in your vehicle.

This light may illuminate if the fuel filler cap is not closed tightly or if the engine was running while the vehicle was refueled.

Canadian models are equipped with this symbol:

ABS Anti-lock Brake System (ABS) warning light

If the warning light comes on, there may be a malfunction in the ABS system (the standard braking system will still function). Check the system by:

1. Stopping in a safe place and switching off the ignition.
2. Restart the engine.
3. If the warning light goes off, no further action is required.

If the warning light remains on, the vehicle should be driven to a trained and qualified Volvo service technician for inspection, see page 110 for additional information.

Canadian models are equipped with this symbol:

Rear fog light

This symbol indicates that the rear fog light (located in the driver's side tail light cluster) is on.

Stability system

This indicator symbol flashes when the DSTC (Dynamic Stability and Traction Control system) is actively working to stabilize the vehicle, see page 155 for more detailed information.

Tire pressure monitoring system (TPMS) – option

This symbol illuminates to indicate that tire pressure in one or more tires is low, see page 259 for detailed information.

Low fuel level

When this light comes on, the vehicle should be refueled as soon as possible.

Information symbol

The information symbol illuminates and a text message is displayed if a fault is detected in one of the vehicle's systems. The message can be erased and the symbol can be turned off by pressing the **READ** button (see page 121 for information) or this will take place automatically after a short time (the length of time varies, depending on the function affected).

Instruments and controls

The information symbol may also illuminate together with other symbols.

High beam indicator

This symbol illuminates when the high beam headlights are on, or if the high beam flash function is used.

Left turn signal indicator

Right turn signal indicator

NOTE

- Both turn signal indicators will flash when the hazard warning flashers are used.
- If either of these indicators flash faster than normal, the direction indicators are not functioning properly.

Indicator and warning symbols

Symbol	Description
	Low oil pressure
PARK BRAKE	Parking brake applied
	SRS airbags
	Seat belt reminder
	Generator not charging
BRAKE	Fault in the brake system
	Warning symbol

Low oil pressure

If the light comes on while driving, stop the vehicle, stop the engine immediately, and check the engine oil level. If the oil level is normal and the light stays on after restart, have the vehicle towed to the nearest trained and qualified Volvo service technician. This is normal, provided it goes off when the engine speed is increased.

Parking brake applied

This symbol illuminates when the parking brake is applied. On models equipped with the electric parking brake, this symbol flashes while the brake is being applied and then glows steadily.

A flashing symbol means that a fault has been detected. See the message in the information display.

Canadian models are equipped with this symbol:

NOTE

This symbol also comes on when the mechanical parking brake is only slightly applied.

Airbags – SRS

If this light comes on while the vehicle is being driven, or remains on for longer than approximately 10 seconds after the vehicle has been started, the SRS system's diagnostic functions have detected a fault in a seat belt lock or pretensioner, a front airbag, side impact airbag, and/or an inflatable curtain. Have the system(s) inspected by a trained and qualified Volvo service technician as soon as possible.

Seat belt reminder

This symbol comes on for approximately 6 seconds if the driver has not fastened his or her seat belt.

Generator not charging

This symbol comes on during driving if a fault has occurred in the electrical system. Contact an authorized Volvo workshop.

Engine temperature

Engine overheating can result from low oil or coolant levels, towing or hard driving at high heat and altitude, or mechanical malfunction. Engine overheating will be signaled with text and a red warning triangle in the middle of the instrument display. The exact text will depend on the degree of overheating. It may range from "**HIGH ENGINE TEMP – SLOW DOWN**" to "**HIGH ENGINE TEMP – STOP ENGINE**." If appropriate, other messages, such as "**COOLANT LEVEL LOW**" will also be displayed. If your engine does overheat so that you must stop the engine, always allow the engine to cool before attempting to check oil and coolant levels.

BRAKE Fault in brake system

If this symbol lights, the brake fluid level may be too low. Stop the vehicle in a safe place and check the level in the brake fluid reservoir, see page 219. If the level in the reservoir is below **MIN**, the vehicle should be transported to an authorized Volvo workshop to have the brake system checked.

Canadian models are equipped with this symbol:

If the BRAKE and ABS symbols come on at the same time, there may be a fault in the brake force distribution system.

1. Stop the vehicle in a safe place and turn off the engine.
2. Restart the engine.

- If both symbols extinguish, continue driving.
- If the symbols remain on, check the level in the brake fluid reservoir, see page 219. If the brake fluid level is normal but the symbols are still lit, the vehicle can be driven, with great care, to an authorized Volvo workshop to have the brake system checked.
- If the level in the reservoir is below **MIN**, the vehicle should be transported to an authorized Volvo workshop to have the brake system checked.

WARNING

- If the fluid level is below the **MIN** mark in the reservoir or if a warning message is displayed in the text window: **DO NOT DRIVE**. Have the vehicle towed to a trained and qualified Volvo service technician and have the brake system inspected.
- If the ABS and Brake system lights are on at the same time, there is a risk of reduced vehicle stability.

Warning symbol

The red warning symbol comes on when a fault has been indicated which could affect the safety and/or drivability of the vehicle. An explanatory text is shown on the information display at the same time. The symbol remains visible until the fault has been rectified but the text message can be cleared with the **READ** button, see page 121. The warning symbol can also come on in conjunction with other symbols.

Action:

1. Stop in a safe place. Do not drive the vehicle further.
2. Read the information on the information display. Implement the action in accordance with the message in the display. Clear the message using **READ**.

Reminder – doors not closed

If one of the doors, the hood or tailgate is not closed properly, the information or warning symbol comes on together with an explanatory text message in the instrument panel. Stop the vehicle in a safe place as soon as possible and close the door, hood or tailgate.

If the vehicle is driven at a speed lower than approximately 5 mph (7 km/h), the information symbol comes on.

Instruments and controls

If the vehicle is driven at a speed higher than approximately 5 mph (7 km/h), the warning symbol comes on.

Trip odometers

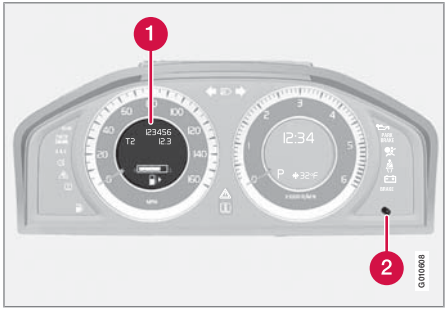

Trip odometers and reset button

1. Odometer display
2. Button for toggling between T1 and T2, and for resetting the odometer

The trip odometers are used to measure short distances. A short press the button toggles between the two trip odometers T1 and T2. A long press (more than 2 seconds) resets an active trip odometer to zero. The distance is shown in the display.

Clock

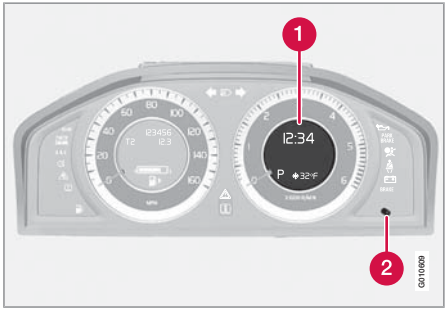

Clock and setting control

1. Display
2. Control for setting the clock

Turn the control clockwise/counterclockwise to set the time. The set time is shown in the information display.

The clock may be temporarily replaced by a symbol in conjunction with a message, see page 121.

Functions

Ignition slot with remote key, start/stop button

Inserting and removing the remote key

The various ignition modes are accessed by inserting the remote key into the ignition slot.

The remote key can be removed from the ignition slot by pressing the key in. It will then be ejected slightly and can be removed from the slot. The gear selector must be in position **P (Park)**.

NOTE

The brake pedal must not be depressed when accessing ignition modes **I** or **II**.

CAUTION

Foreign objects in the ignition slot can impair function or damage the lock.

Ignition mode 0

– Insert the remote key in the ignition slot.

Ignition mode I

– Press the remote key into the ignition slot and press **START/STOP ENGINE**.

Ignition mode II

– Press the remote key into the ignition slot and press **START/STOP ENGINE** for approx. 2 seconds.

Ignition mode III (engine start)

Start the engine, see page 103.

Stopping the engine

– Press **START/STOP ENGINE**. (If the engine is running and the vehicle is moving, keep the button depressed until the engine stops).

Return to ignition mode 0

– Press **START/STOP ENGINE** to return from **I**, **II**, or **III** to ignition mode **0**.

Position	Function
0	Odometer, clock and temperature gauge are illuminated. Steering lock is deactivated. The audio system can be used.
I	Moonroof, power windows, climate system blower, ECC, windshield wipers can be used.
II	The headlights come on. Warning/indicator lights come on for 5 seconds. All equipment operates apart from heated seats and rear window defroster, which only work when the engine is running.
III	The starter motor will operate until the engine has started.

Functions with timer

The audio system can be operated without a key for 15 minutes at a time by pressing the **POWER** button. The power windows work for several minutes after the key has been removed, although not after the door has been opened.

Ignition modes

NOTE

Use the **POWER** button for the audio system when the engine is not running to avoid discharging the battery.

Front seats

1. Lumbar support: turn the control for firmer or softer lumbar support.
2. Front-rear adjustment: lift the bar and move the seat to the position of your choice.
3. Raise/lower front edge of seat cushion, pump up/down.
4. Backrest tilt: turn the control to adjust the angle of the backrest.
5. Raise/lower the seat, pump up/down.
6. Control panel for power seat.

WARNING

- Do not adjust the seat while driving. The seat should be adjusted so that the brake pedal can be depressed fully. In addition, position the seat as far rearward as comfort and control allow.
- Check that the seat is securely locked into position after adjusting.

Folding the front seat backrest

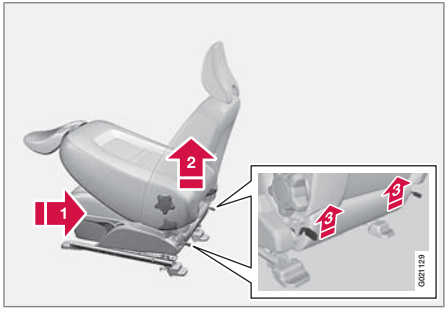

The front passenger seat backrest can be folded to a horizontal position to make room for a long load. Fold the backrest as follows:

1. Move the seat as far back as possible.
2. Adjust the backrest to an upright position.
3. Lift the catches on the rear of the backrest.
4. Without releasing the catches, push the backrest forward.

   Move the seat as far forward as possible so that the head restraint slides under the glove compartment.

WARNING

Cover sharp edges on the load to help prevent injury to occupants. Secure the load to help prevent shifting during sudden stops.

Power seat (option)

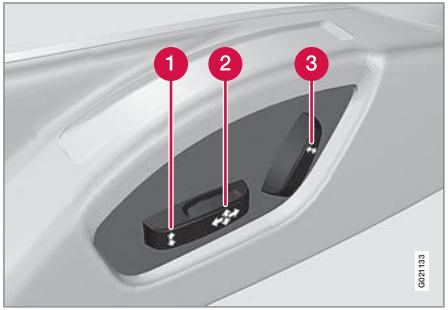

1. Front edge of seat cushion up/down
2. Seat forward/rearward and up/down
3. Backrest tilt

Seats

Operation

The seats can be adjusted for a short period after unlocking the door with the remote control without the key in the ignition slot. Seat adjustment is normally made when the ignition is on and can always be made when the engine is running.

NOTE

- Only one of the power seat's controls can be used at the same time.
- The power seats have an overload protector that activates if a seat is blocked by any object. If this occurs, switch off the ignition (key in position **0**) and wait for a short period before operating the seat again.

Seat with memory function (option)

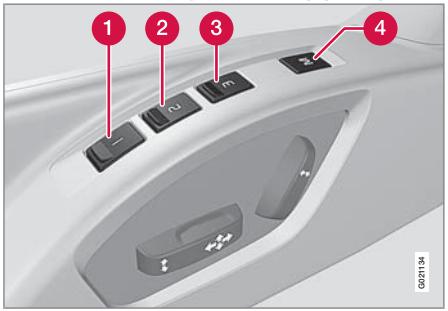

1. Stored seat position
2. Stored seat position
3. Stored seat position
4. Memory button

Programming the memory

Three different seating and door mirror positions can be stored in the driver seat's memory.

The following example explains how button 1 can be programmed. Buttons 2 and 3 can be programmed in the same way.

To program (store) a seat position and door mirror position in button 1:

1. Move the seat (and door mirrors) to the desired position using the seat and mirror adjustment controls.
2. Press and hold down the **M** (memory) button.
3. With the memory button depressed, press button **1** briefly to store the current position for the seat/mirrors.

To move the seat and mirrors to the position that they were in when a button was programmed:

– Press and hold down button 1 until the seat and mirrors stop moving.

NOTE

As a safety precaution, the seat will stop automatically if the button is released before the seat has reached the preset position.

Remote keyless entry system and the driver's seat

The remote control transmitter also controls the position of the power driver's seat in the following way:

1. Adjust the seat to your preferences.
2. When you leave your vehicle, lock it using the remote control.

The position of the driver's seat is now stored in the remote control's memory.

Automatic seat adjustment

To move the seat to the position in which you left it:

1. Unlock the driver's door with the same remote control (the one used to lock the doors)
2. Open the driver's door within 2 minutes.

The driver's seat will automatically move to the position in which you left it.

NOTE

- The key memory is independent of the seat memory.
- The seat will Move to this position even if someone else has moved it to a different seating position and locked the vehicle with a different remote control.
- This feature will work in the same way with all of the remote control transmitters that you use with your vehicle.

The function can be activated/deactivated under **Car key memory ➔ Seat & mirror positions**. For a description of the menu system, see the information beginning on page 120.

Emergency stop

If the seat accidentally begins to move, press one of the buttons to stop the seat.

WARNING

- Because the driver's seat can be adjusted with the ignition off, children should never be left unattended in the vehicle.
- Movement of the seat can be STOPPED at any time by pressing any button on the power seat control panel.
- Do not adjust the seat while driving. The seat should be adjusted so that the brake pedal can be depressed fully. In addition, position the seat as far rearward as comfort and control allow.
- The seat rails on the floor must not be obstructed in any way when the seat is in motion.

Heated/ventilated seats (option)

See page 126.

Rear seats

Folding down the rear seat backrests

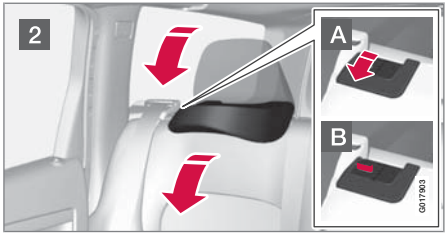

The three sections of the rear seat backrest can be folded down in different combinations to make it easier to transport long objects.

- The left (driver's side) section can be folded down separately.
- The center section can be folded down separately.

Seats

- The right (passenger's side) section can be folded down together with the center section.
- All three sections can be folded down together.

1 Release and lower the center head restraint (see page 82) if the center and/or right section of the backrest is to be lowered. The outboard head restraints fold down automatically.

2 Pull up the backrest release control on the respective section(s) and fold the section(s) down.

NOTE

It may be necessary to move the front seats forward or put their backrests in a more upright position before folding down the rear seat backrests.

WARNING

- When the backrest(s) are returned to the upright position, check that it is properly locked in place. The red indicators should not be visible.
- Return the outboard head restraints to the upright position.
- Long loads should always be securely anchored to help avoid injury in the event of a sudden stop.
- Always turn the engine off and apply the parking brake when loading/unloading the vehicle.
- Place the transmission in the Park (**P**) position to help prevent inadvertent movement of the gear selector.
- On hot days, the temperature in the vehicle interior can rise very quickly. Exposure of people to these high temperatures for even a short period of time can cause heat-related injury or death. Small children are particularly at risk.

Rear center head restraint

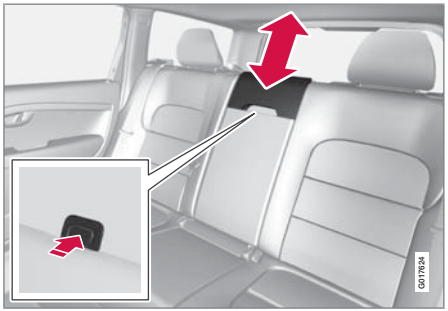

The center head restraint should be adjusted according to the passenger's height. The restraint should be carefully adjusted to support the occupant's head.

- Pull the head restraint up as required.
- To lower, press and hold the button (located at the center, between the backrest and the head restraint) while pressing the head restrain down.

WARNING

The center rear seat head restraint should only be in its lowest position when this seat is NOT occupied. When the center position is occupied, the head restraint should be correctly adjusted to the passenger's height.

Manually lowering the rear seat's outboard head restraints

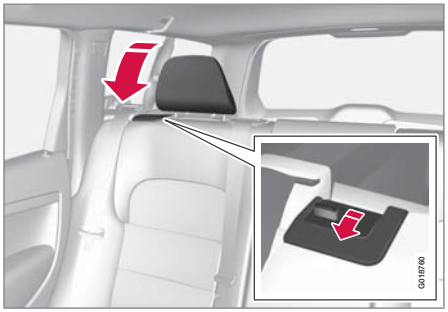

- Pull the handle closest to the head restraint to fold it down.
- To return the head restraint to the upright position, push it up until it clicks into place.

NOTE

- The head restraint must be returned to the upright position manually.
- The outboard head restraints cannot be folded down on models that are not equipped with this button.

WARNING

For safety reasons, no one should be allowed to sit in the outboard rear seat positions if the head restraints are folded down. If these positions are occupied, the head restraints should be in the upright (fixed) position.

Steering wheel

Adjusting

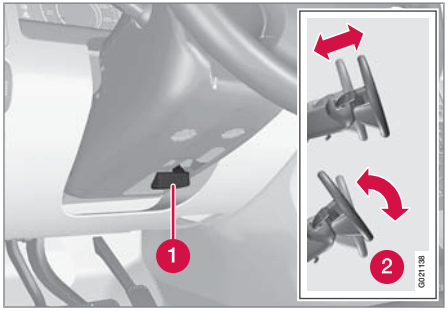

Adjusting the steering wheel

1. Lever for releasing/locking the steering wheel
2. Possible positions

The steering wheel can be adjusted for both height and reach:

1. Pull the lever toward you to release the steering wheel.
2. Adjust the steering wheel to the position that suits you.
3. Push back the lever to lock the steering wheel in place. If the lever is difficult to push into place, press the steering wheel lightly at the same time as you push the lever.

WARNING

Never adjust the steering wheel while driving.

With speed-dependent power steering (option) the level of steering force can be adjusted, see page 157.

Keypads

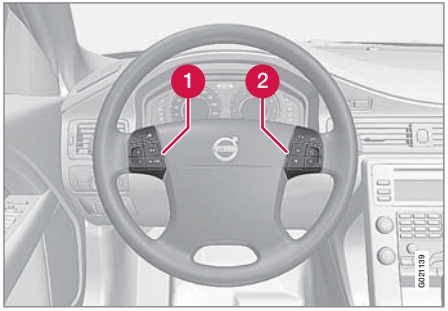

Keypads in the steering wheel

1. Cruise control, see page 158. Adaptive cruise control (option), see page 166.
2. Audio controls, see page 131.

Horn

Horn

– Press the steering wheel hub to sound the horn.

Lighting panel

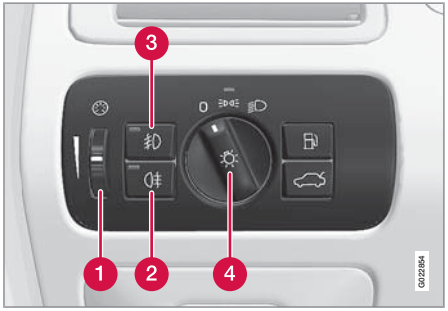

Overview, light switches

1. Thumb wheel for adjusting display and instrument lighting
2. Rear fog light
3. Front fog lights
4. Headlights/parking lights

Instrument lighting

Illumination of the display and instrument lights will vary, depending on ignition mode.

The display lighting is automatically subdued in darkness and the sensitivity is set with the thumb wheel.

The intensity of the instrument lighting is adjusted with the thumb wheel.

High/low beam headlights

Headlight switch and lever

0	Daytime running lights/no high beams
	Parking lights
	Low beams

Low beams

When the engine is started, the low beams are activated automatically (daytime running lights) if the headlight control is in position **0** or .

Daytime running lights can be deactivated by a trained and qualified Volvo service technician.

NOTE

- The use of daytime running lights is mandatory in Canada.
- Continuous high beams cannot be activated when the headlight switch is in position or 0 . High beam flash will function in these positions.

High beam flash

– Move the lever toward the steering wheel to position . The high beams come on until the lever is released.

High/low beam headlights

Continuous high beams

1. Set the ignition to mode **II**.
2. With the light switch in position , pull the turn signal lever toward the steering wheel to position 2 to toggle between high and low beams (this also applies on models equipped with the optional Active Bi-Xenon® headlights).

Lighting

> The symbol illuminates in the instrument panel to indicate that the high beams are on.

Active Bi-Xenon Lights® (ABL)–option

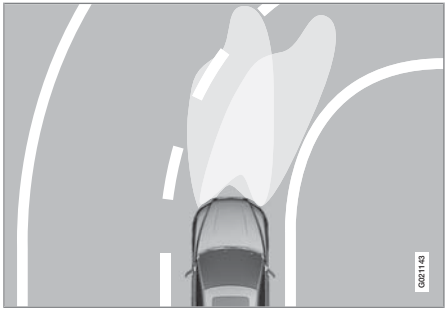

Headlight pattern with ABL deactivated (left) and activated (right) respectively

When the ABL function is activated, the headlight beams adjust laterally to help light up a curve according to movements of the steering wheel (see the right-pointing beam in the illustration).

This function is activated automatically when the engine is started and can be deactivated/reactivated by pressing the ABL button in the center console. This button lights up when the ABL function is activated, and will flash if there is a fault in the system.

NOTE

This function is only active in twilight or dark conditions, and only when the vehicle is in motion.

Parking lights

Headlight control in position for parking lights

The front and rear parking lights can be turned on even when the ignition is switched off.

Turn the headlight control to the center position (the license plate lighting comes on at the same time).

The lighting also comes on when the tailgate is opened in order to alert anyone traveling behind your vehicle.

Brake lights

The brake lights come on automatically when the brakes are applied.

Emergency brake lights (EBL)

Emergency Brake Lights, EBL, activate in the event of sudden braking or if the ABS system is activated. This function causes an additional taillight on each side of the vehicle to illuminate to help alert vehicles traveling behind.

The EBL function activates if:

- The ABS system activates for more than approximately a half second
- In the event of sudden braking while the vehicle is moving at speeds above approximately 6 mph (10 km/h)

When the vehicle has come to a stop, the brake lights and additional taillights remain on for as long as the brake pedal is depressed or until braking force on the vehicle is reduced.

Front fog lights

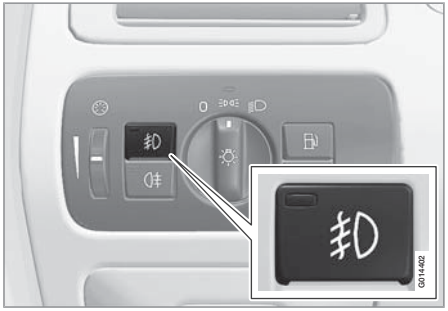

Button for front fog lights

The front fog lights can be switched on together with high/low beams or the parking lights.

– Press the button to switch the fog lights on/off. The light in the button comes on when the fog lights are on.

NOTE

Regulations regarding the use of the front fog lights may vary, depending on where you drive.

Rear fog light

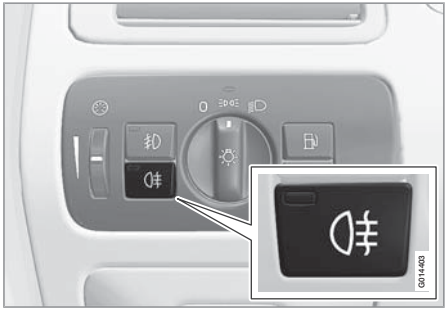

Button for rear fog light

The single rear fog light is located in the driver's side taillight cluster. The rear fog light will only function in combination with the high/low beam headlights or the optional front fog lights.

– Press the button to switch the rear fog light on/off.

> The rear fog light indicator symbol on the instrument panel and the light in the button come on when the rear fog light is switched on.

NOTE

The rear fog light is considerably brighter than the normal tail lights and should be used only when conditions such as fog, rain, snow, smoke or dust reduce visibility for other vehicles to less than 500 ft. (150 meters).

Hazard warning flashers

Location of the hazard warning flasher button

The hazard warning flasher should be used to indicate that the vehicle has become a traffic hazard.

– To activate the flashers, press the button in the center dash. Press the button again to turn off the flashers.

Lighting

NOTE

- Regulations regarding the use of the hazard warning flasher may vary, depending on where you live.
- The hazard warning flashers will be activated automatically if an airbag deploys.

Turn signals

Turn signals

When changing lanes

1 The driver can automatically flash the turn signals 3 times by moving the turn signal lever up or down to the first position and releasing it.

When turning

2 Move the lever as far up or down as possible to start the turn signals. The turn signals will be cancelled automatically by the movement of the steering wheel, or the lever can be returned to its initial position by hand.

NOTE

- This automatic flashing sequence can be interrupted by immediately moving the lever in the opposite direction.
- If the turn signal indicator flashes faster than normal, check for a burned-out turn signal bulb.

Interior lighting, front

Light switches, front roof lighting

1. Drivers side front reading light, on/off
2. Passenger's side front reading light, on/off
3. Overhead courtesy lighting.

The lighting in the front part of the passenger compartment is controlled with the buttons (1) and (2) in the roof console.

Switch (3) has three positions for all passenger compartment lighting:

- Off – right side depressed, automatic lighting off.
- Neutral position.
- On – left side depressed, passenger compartment lighting on.

Interior lighting, rear

Rear reading lights

The lights are switched on or off by pressing each respective button.

Courtesy lights/door step lighting (option)

The courtesy lights/door step lighting switch on/off automatically when one of the front doors is opened/closed.

Glove compartment lighting

The glove compartment lighting switches on/off automatically when the lid is opened/closed.

Overhead courtesy lighting

The passenger compartment lighting is switched on and off automatically when button (3) is in the neutral position.

The lighting comes on and remains on for 30 seconds if:

- the vehicle is unlocked from the outside with the key or remote control
- the engine is switched off and the ignition is in mode **0**.

The lighting switches off when:

- the engine is started
- the vehicle is locked from the outside.

The lighting comes on and remains on for two minutes if one of the doors is open.

The passenger compartment lighting can be switched on and off manually within 30 minutes after the vehicle has been unlocked.

If the lighting is switched on manually and the vehicle is locked, the courtesy lighting will switch off automatically after one minute.

Home safe lighting

When you leave your vehicle at night, you can make use of the home safe lighting function to illuminate the area in front of the vehicle.

1. Remove the key from the ignition slot.
2. Pull the direction indicator lever as far as possible towards the steering wheel and release it.
3. Exit the vehicle and lock the doors.

The headlights, parking lights, turn signals, lights in the door mirrors, license plate lights, and footwell lighting will illuminate and remain on for 30 [1], 60 or 90 seconds. The time interval can be set under **Car settings ➔ Light settings ➔ Home safe lighting**. For a description of the menu system, see page 120.

Approach lighting

Approach lighting is activated by pressing the approach light button on the remote key (see the illustration on page 54).

When the function has been activated, the parking lights, indicator lights, door mirror lights, license plate lighting, dome lighting and door step lighting come on.

[1] Factory setting

Lighting

The time interval for this lighting can be set under **Car settings** ➔ **Light settings** ➔ **Approach lighting**. For a description of the menu system, see page 120.

Windshield wipers/washers

Windshield wipers and washers

1. Rain sensor (option) on/off
2. Thumb wheel sensitivity/frequency

CAUTION

- Use ample washer fluid when washing the windshield. The windshield should be thoroughly wet when the wipers are in operation.
- Before using the wipers, ice and snow should be removed from the windshield/rear window. Be sure the wiper blades are not frozen in place.

Windshield wipers off

0 — Move the lever to position **0** to switch off the windshield wipers.

Single sweep

Move the lever upward from position **0** to sweep the windshield one stroke at a time for as long as the lever is held up.

Intermittent wiping

INT — With the lever in this position, you can set the wiper interval by twisting the thumb wheel upward to increase wiper speed or downward to decrease the speed.

Continuous wiping

The wipers operate at normal speed.

The wipers operate at high speed.

Rain sensor (option)

The rain sensor automatically regulates wiper speed according to the amount of water on the windshield. The sensitivity of the rain sensor can be adjusted moving the thumb wheel up (the wipers will sweep the windshield more frequently) or down (the wipers will sweep the windshield less frequently).

NOTE

The wipers will make an extra sweep each time the thumb wheel is adjusted upward.

When the rain sensor is activated, the symbol will illuminate in the instrument panel.

Activating and setting the sensitivity

When activating the rain sensor, the vehicle must be running or in ignition mode **II** and the windshield wiper lever must be in position **0** or in the single sweep position.

Activate the rain sensor by pressing the button . The windshield wipers will make one sweep.

Press the lever up for the wipers to make an extra sweep. The rain sensor returns to active mode when the stalk is released back to position **0**.

Deactivating

Deactivate the rain sensor by pressing the button or press the lever down to another wiper position.

The rain sensor is automatically deactivated when the key is removed from the ignition slot or five minutes after the ignition has been switched off.

Wipers and washers

CAUTION

The rain sensor should be deactivated when washing the car in an automatic car wash, etc. If the rain sensor function is left on, the wipers will start inadvertently in the car wash and could be damaged.

Windshield washing

Washing function

Move the lever toward the steering wheel to start the windshield and headlight washers. After the lever is released the wipers make several extra sweeps.

Heated washer nozzles (option)

The washer nozzles are heated automatically in cold weather to help prevent the washer fluid from freezing.

High-pressure headlight washing (option)

High-pressure headlight washing consumes a large quantity of washer fluid. To save fluid, the headlights are washed using two alternatives:

- **Low/high beam headlights on.** The headlights will be washed the first time the windshield is washed. Thereafter, the headlights will only be washed once for every five times the windshield is washed within a 10-minute period.
- **Parking lights on.** Optional Active Bi-Xenon® headlights will be washed once for every five times the windshield is washed. Normal halogen headlights will not be washed.

CAUTION

Use ample washer fluid when washing the windshield. The windshield should be thoroughly wet when the wipers are in operation.

NOTE

One headlight is washed at a time.

Tailgate wiper/washer

1. Intermittent wiping
2. Normal (continuous) wiping

Move the lever forward (see the arrow in the illustration) to start the tailgate washer.

Tailgate wiper and reverse gear

If the windshield wipers are on and the transmission is put into reverse gear, the tailgate wiper will go into intermittent wiping function[1].

[1] Consult your Volvo retailer if you would like to have this function deactivated.

This function is deactivated when a different gear is selected.

NOTE

On vehicles with the optional rain sensor, the tailgate wiper will be activated when reverse is selected, if the rain sensor is activated and it is raining.

If the tailgate wiper is in the normal (continuous) wiping mode, selecting different gears will not affect its function.

Power windows

Power windows

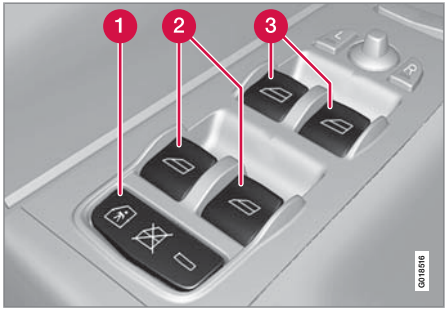

Driver's door control panel

1. Switch for power child safety locks[1] and disengaging rear power window buttons, see page 48
2. Rear window controls
3. Front window controls.

WARNING

- Always remove the ignition key when the vehicle is unattended.
- Never leave children unattended in the vehicle.
- Make sure that the windows are completely unobstructed before they are operated.

Operating

Operating the power windows

1. Manual up/down
2. Auto up/down.

All power windows can be operated using the control panel in the driver's door. The control panels in the other doors only operate the window in the respective doors.

For the power windows to function, the ignition must be in at least mode **I**. When the vehicle has been running, the power windows can be operated for several minutes after the remote key has been removed from the ignition slot, or until a door has been opened.

NOTE

- Movement of the windows will stop if they are obstructed in any way.
- To reduce buffeting wind noise if the rear windows are opened, also open the front windows slightly.

Manual up/down

– Move one of the controls up/down slightly.
  > The power windows move up/down as long as the control is held in position.

Auto up/down

– Move one of the controls up/down as far as possible and release it.
  > The window will open or close completely.

[1] Option on certain markets only.

Resetting

If the battery has been disconnected, the auto open function must be reset so that it will work properly.

1. Gently raise the front section of the button to close the window and hold it for one second.
2. Release the button briefly.
3. Raise the front section of the button again for one second.

Laminated glass (option on certain markets only)

This glass is reinforced to help provide protection against break-ins and improved sound insulation in the passenger compartment. The windshield and other windows have laminated glass.

Mirrors

Power door mirrors

Door mirror controls

Adjusting

1. Press the **L** button for the left door mirror or the **R** button for the right door mirror. The light in the button comes on.
2. Adjust the position with the joystick in the center.
3. Press the **L** or **R** button again. The light should no longer be on.

WARNING

Objects seen in the mirrors may appear further away than they actually are.

Retractable power door mirrors (option on certain markets only)

The mirrors can be retracted for parking/driving in narrow spaces:

1. Press down the **L** and **R** buttons at the same time.
2. Release them after approximately one second. The mirrors automatically stop in the fully retracted position.

Fold out the mirrors by pressing down the **L** and **R** buttons at the same time. The mirrors automatically stop in the fully extended position.

Storing the position (option)

The mirror positions are stored in the key memory when the vehicle has been locked with the remote key. When the vehicle is unlocked with the same remote control the mirrors and the driver's seat adopt the stored positions when the driver's door is opened.

The function can be activated/deactivated under **Car key memory ➔ Seat & mirror positions**. For a description of the menu system, see page 120.

Tilting the door mirror when parking (option)

The door mirrors can be tilted down to help give the driver a better view along the sides of the vehicle, for example when parallel parking.

To acitvate this function, select reverse gear and press the **L** or **R** mirror control button to tilt the mirror down.

The door mirror will reset to its normal position:

- after 10 seconds when reverse is disengaged and the car remains stopped.
- immediately when reverse is disengaged and the vehicle's forward speed exceeds approximately 6 mph (10 km/h).
- immediately if you press the corresponding **L** or **R** button again.
- when the engine is turned off.
- when the side mirrors are folded in.

NOTE

Only one mirror can be tilted down at a time.

Automatic retraction when locking

When the vehicle is locked/unlocked with the remote key the door mirrors are automatically retracted/extended.

The function can be activated/deactivated under **Car settings ➔ Retract mirrors when**

locking. For a description of the menu system, see page 120.

Resetting to neutral

Mirrors that have been moved out of position by an external force must be electrically reset to the neutral position for electric retracting/extending to work.

- Retract the mirrors with the **L** and **R** buttons.
- Fold them out again with the **L** and **R** buttons.

The mirrors are now reset in neutral position.

Home safe and approach lighting

The light on the door mirrors comes on when approach lighting or home safe lighting is selected, see page 89.

Rear window and door mirror defrosters

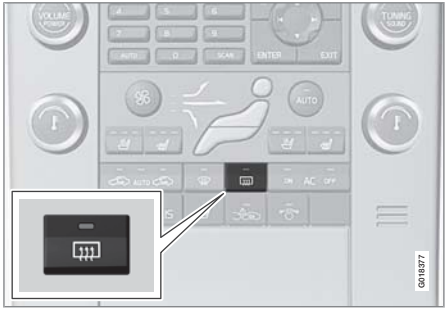

Use the defroster to quickly remove misting and ice from the rear window and the door mirrors.

Press the button once to start simultaneous rear window and door mirror defrosting. The light in the button indicates that the function is active. Defrosting is deactivated automatically and its duration is controlled by the outside temperature.

The rear window is demisted/de-iced automatically if the vehicle is started in an outside temperature lower than 45 °F (7 °C).

Defrosting can be selected under **Climate settings** ➔ **Auto. rear defroster**. Select between **On** or **Off**.

Interior rearview mirror

Auto-dim function

An integrated sensor reacts to headlights from following traffic and automatically reduces glare in the mirror.

Power moonroof

Power moonroof (option on certain markets only)

The moonroof controls are located in the ceiling console near the rearview mirror. The moonroof can be opened vertically and horizontally. The vehicle's must be in ignition mode **I** or **II** for the moonroof to be operated.

CAUTION

- Remove ice and snow before opening the moonroof.
- Do not operate the moonroof if it is frozen closed.
- Never place heavy objects on the moonroof.

Sliding moonroof

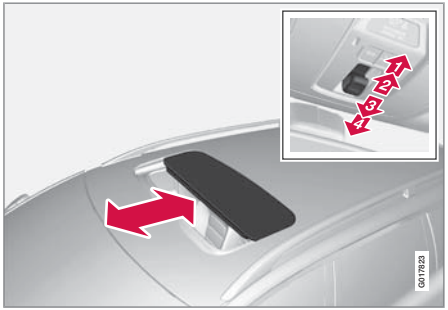

Sliding moonroof, forward/rearward

1 Opening, automatic

2 Opening, manual

3 Closing, manual

4 Closing, automatic

Automatic opening

– Pull the switch as far back as possible (to the position for automatic opening) and release it to automatically fully slide open the moonroof.

Manual opening

– Pull the switch back to the first stop (the position for manual opening) and hold it until the moonroof has opened to the position of your choice.

Manual closing

– Push the switch forward to the first stop (the position for manual closing) and hold it until the moonroof has closed to the position of your choice, or has closed completely.

Automatic closing

– Push the switch as far forward as possible (the position for automatic closing) and release it to automatically close the moonroof.

WARNING

- During manual closing, if the moonroof is obstructed, immediately open it again.
- Never open or close the moonroof if it is obstructed in any way.
- Never allow a child to operate the moonroof.
- Never leave a child alone in a vehicle.
- Never extend any object or body part though the open moonroof, even if the vehicle's ignition is completely switched off.

Tilt position

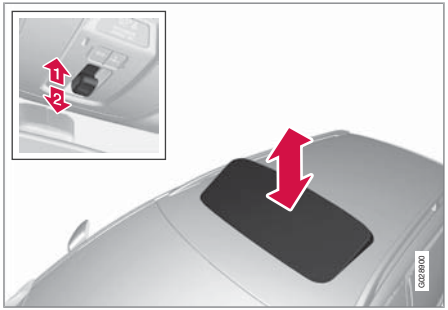

Tilt position, raised at the rear edge

1. Open by pressing the rear edge of the control upward.
2. Close by pulling the rear edge of the control downward and hold it until the moonroof has closed completely.

Visor

The moonroof features a sliding visor. The visor slides open automatically when the moonroof is opened, and must be closed manually.

HomeLink® Wireless Control System (option)

Introduction

The HomeLink Wireless Control System provides a convenient way to replace up to three hand-held radio-frequency (RF) transmitters used to activate devices such as gate operators, garage door openers, entry door locks, security systems, even home lighting. Additional HomeLink information can be found on the Internet at www.homelink.com.

WARNING

- If you use HomeLink to open a garage door or gate, be sure no one is near the gate or door while it is in motion.
- When programming a garage door opener, it is advised to park outside of the garage.
- Do not use HomeLink with any garage door opener that lacks safety stop and reverse features as required by U.S. federal safety standards (this includes any garage door opener model manufactured before April 1, 1982). A garage door that cannot detect an object - signaling the door to stop and reverse - does not meet current U.S. federal safety standards. For more information, contact HomeLink at: www.homelink.com.

Retain the original transmitter of the RF device you are programming for use in other vehicles as well as for future HomeLink programming. It is also suggested that upon the sale of the vehicle, the programmed HomeLink buttons be erased for security purposes. Refer to “Erasing HomeLink Buttons”.

Programming HomeLink

NOTE

Some vehicles may require the ignition switch to be turned on or to the second (“accessories”) position for programming and/or operation of HomeLink. It is also recommended that a new battery be placed in the hand-held transmitter of the device being programmed to HomeLink for quicker training and accurate transmission of the radio-frequency signal.

1. Position the end of your hand-held transmitter 1–3 inches (5–14 cm) away from the HomeLink button you wish to program while keeping the indicator light in view.
2. Simultaneously press and hold both the chosen HomeLink and hand-held transmitter buttons until the HomeLink indicator light changes from a slow to a rapidly blinking light. Now you may release both the HomeLink and hand-held transmitter buttons.

NOTE

Some devices may require you to replace this Programming Step 2 with procedures noted in the “Gate Operator / Canadian Programming” section. If the HomeLink indicator light does not change to a rapidly blinking light after performing these steps, contact HomeLink at www.homelink.com.

3. Firmly **press, hold for five seconds and release** the programmed HomeLink button up to two separate times to activate the door. If the door does not activate, press and hold the just-trained HomeLink button and observe the indicator light.
   - If the indicator light **stays on constantly, programming is complete** and your device should activate when the HomeLink button is pressed and released.
   - If the indicator light blinks **rapidly for two seconds and then turns to a constant light continue with “Programming” steps 4-6** to complete the programming of a rolling code equipped device (most commonly a garage door opener).
4. At the garage door opener receiver (motor-head unit) in the garage, locate the “learn” or “smart” button. This can usually be found where the hanging antenna wire is attached to the motor-head unit.
5. Firmly press and release the “learn” or “smart” button. (The name and color of the button may vary by manufacturer.) There are 30 seconds to initiate step 6.
6. Return to the vehicle and firmly press, hold for two seconds and release the programmed HomeLink button. Repeat the “press/hold/release” sequence a second time, and, depending on the brand of the garage door opener (or other rolling code equipped device), repeat this sequence a third time to complete the programming process.

HomeLink should now activate your rolling code equipped device.

Gate Operator/Canadian Programming

Canadian radio-frequency laws require transmitter signals to “time-out” (or quit) after several seconds of transmission – which may not be long enough for HomeLink to pick up the signal during programming. Similar to this Canadian law, some U.S. gate operators are designed to “time-out” in the same manner.

If you live in Canada or you are having difficulties programming a gate operator or garage door opener by using the “Programming” procedures, **replace “Programming HomeLink” step 2 with the following**:

- Continue to press and hold the HomeLink button while you **press and release - every two seconds** (“cycle”) your hand-held transmitter until the HomeLink indicator light changes from a slow to a rapidly blinking light. Now you may release both the HomeLink and hand-held transmitter buttons.

Proceed with “Programming” step 3 to complete.

Using HomeLink

To operate, simply press and release the programmed HomeLink button. Activation will now occur for the trained device (i.e., garage door opener, gate operator, security system, entry door lock, home/office lighting, etc.). For convenience, the hand-held transmitter of the device may also be used at any time. In the event that there are still programming difficulties or questions, contact HomeLink at: www.homelink.com.

HomeLink® Wireless Control System (option)

Erasing HomeLink Buttons

To erase programming from the three HomeLink buttons (individual buttons cannot be erased but can be “reprogrammed” as outlined below), follow the step noted:

- Press and hold the two outer HomeLink buttons until the indicator light begins to flash-after 10 seconds. Release both buttons. Do not hold for longer that 20 seconds. HomeLink is now in the train (or learning) mode and can be programmed at any time beginning with “Programming” - step 1.

Reprogramming a Single HomeLink Button

To program a device to HomeLink using a HomeLink button previously trained, follow these steps:

1. Press and hold the desired HomeLink button. **DO NOT** release the button.
2. The indicator light will begin to flash after 20 seconds. Without releasing the HomeLink button, proceed with “Programming” - step 1.

For questions or comments, contact HomeLink at: www.homelink.com or 1–800–355–3515.

This device complies with FCC rules part 15 and Industry Canada (IC) RSS-210. Operation is subject to the following two conditions: (1) This device may not cause harmful interference, and (2) This device must accept any interference that may be received including interference that may cause undesired operation.

NOTE

The transmitter has been tested and complies with FCC and IC rules. Changes or modifications not expressly approved by the party responsible for compliance could void the user’s authority to operate the device.[1]

HomeLink and the HomeLink house are registered trademarks of Johnson Controls, Inc.

[1] The term “IC:” before the certification/registration number only signifies that Industry Canada technical specifications were met.

Starting the engine

Ignition switch with remote key inserted (see page 77 for more information on ignition modes)

WARNING

Before starting the engine:

- Fasten the seat belt.
- Check that the seat, steering wheel and mirrors are adjusted properly.
- Make sure the brake pedal can be depressed completely. Adjust the seat if necessary.

1. Insert the remote key into the ignition slot with the buttons upward and the metallic key blade pointing outward (not inserted into the slot)[1].

2. Push lightly on the remote key. It will be automatically drawn into the ignition slot in the correct position.

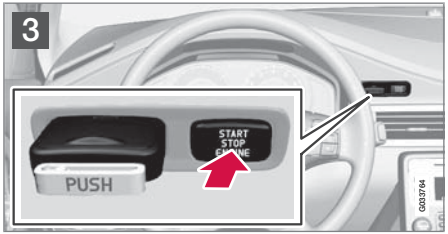

3. Depress the brake pedal[2]. Press and release the **START/STOP ENGINE** button. The autostart function will operate the starter motor until the engine starts.

   The starter motor operates for a maximum of 10 seconds. If the engine has not started, repeat the procedure.

WARNING

An extra mat on the driver's floor can cause the accelerator and/or brake pedal to catch. Check that the movement of these pedals is not impeded. Not more than one protective floor covering may be used at one time.

[1] On vehicles with the optional keyless drive, it is only necessary to have a remote key in the passenger's compartment.
[2] If the vehicle is moving, it is only necessary to press the START/STOP ENGINE button to start the vehicle.

Starting the engine

WARNING

- Always remove the remote key from the ignition slot when leaving the vehicle, especially if there are children in the vehicle.
- Never remove the remote key from the ignition slot while driving or when the vehicle is being towed. The steering lock could otherwise be activated, making it impossible to steer the vehicle. Never remove the remote key with keyless drive function (option) from the vehicle while driving or during towing.
- Always place the gear selector in Park and apply the parking brake before leaving the vehicle. Never leave the vehicle unattended with the engine running.
- Always open garage doors fully before starting the engine inside a garage to ensure adequate ventilation. The exhaust gases contain carbon monoxide, which is invisible and odorless but very poisonous.

NOTE

- The idling speed can be noticeably higher than normal during cold starts. This is to enable emission control system can reach normal operating temperature as quickly as possible, which helps reduce exhaust emissions[3].
- **Keylock:** Your vehicle is equipped with a keylock system. When the engine is switched off, the gear selector must be in the Park position before the key can be removed[4] from the ignition slot.

CAUTION

- When starting in cold weather, the automatic transmission may shift up at slightly higher engine speeds than normal until the automatic transmission fluid reaches normal operating temperature.
- Do not race a cold engine immediately after starting. Oil flow may not reach some lubrication points fast enough to prevent engine damage.
- The engine should be idling when you move the gear selector. Never accelerate until after you feel the transmission engage. Accelerating immediately after selecting a gear will cause harsh engagement and premature transmission wear.
- Selecting **P** or **N** when idling at a standstill for prolonged periods of time will help prevent overheating of the automatic transmission fluid.

Keyless drive (option)

Follow steps 3 – 4 for starting the engine.

[3] If the gear selector is in the **D** or **R** positions and the car is not moving, engine speed (rpm) will be lower and it will take longer for the engine to reach normal operating temperature.
[4] Does not apply to vehicles with the optional keyless drive.

NOTE

For the vehicle to start, one of the vehicle's remote keys must be in the passenger compartment.

Jump starting

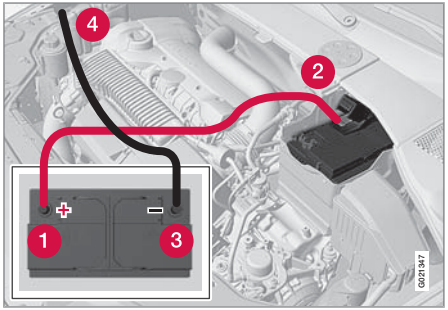

Connecting the jumper cables

Follow these instructions to jump start your vehicle's dead battery or to jump start another vehicle's dead battery using your vehicle. If the 12-volt auxiliary battery to be used is in another vehicle, check that the vehicles are not touching to prevent premature completion of a circuit. Be sure to follow jump starting instructions provided for the other vehicle.

To jump start your vehicle:

1. Switch off the ignition (set the ignition to mode **0**, see page 77).
2. First connect the red jumper cable to the auxiliary battery's positive (+) terminal 1.
3. Fold back the cover over the positive (+) terminal on your vehicle's battery 2, marked with a "+" sign, located under a folding cover.
4. Connect the black jumper cable to the auxiliary battery's negative (–) terminal 3 and to the ground point in your vehicle's engine compartment (right engine mount at the top, on the outer screw) 4 .
5. Start the engine in the assisting vehicle, then start the engine in the vehicle with dead battery.
6. After the engine has started, first remove the negative (–) terminal jumper cable (black). Then remove the positive (+) terminal jumper cable (red).

WARNING

PROPOSITION 65 WARNING!

Battery posts, terminals, and related accessories contain lead and lead compounds, chemicals known to the state of California to cause cancer and reproductive harm. Wash hands after handling.

CAUTION

Connect the jumper cables carefully to avoid short circuits with other components in the engine compartment.

Starting the engine

WARNING

- Do not connect the jumper cable to any part of the fuel system or to any moving parts. Avoid touching hot manifolds.
- Batteries generate hydrogen gas, which is flammable and explosive.
- Battery fluid contains sulfuric acid. Do not allow battery fluid to contact eyes, skin, fabrics or painted surfaces. If contact occurs, flush the affected area immediately with water. Obtain medical help immediately if eyes are affected.
- Never expose the battery to open flame or electric spark.
- Do not smoke near the battery.
- Failure to follow the instructions for jump starting can lead to injury.

Automatic transmission

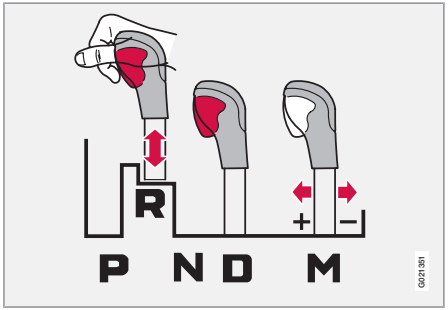

Shiftgate positions[1]

Depress the button on the front of the gear selector knob to move the gear selector between the **R**, **N**, **D**, and **P** positions.

The gear selector can be moved freely between the Geartronic (manual shifting) and Drive (**D**) positions while driving.

Park position (P)

Select the **P** position when starting or parking.

Keylock

To remove the remote key from the ignition slot, the gear selector must be in the **P** position. The remote key is locked in the slot in all other positions.

Shiftlock

When **P** has been selected, the transmission is mechanically blocked in this position. The brake pedal must be depressed before the gear lever can be moved from the **P** position.

Always apply the parking brake when the vehicle is parked, see page 114. If the vehicle is equipped with the optional electric parking brake, press the control to apply the brake, see page 114.

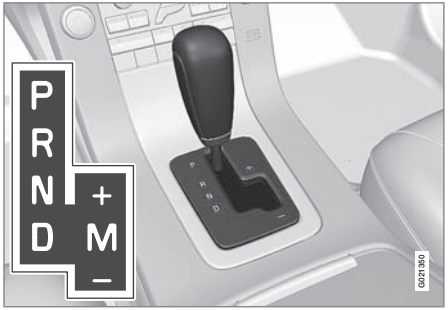

CAUTION

The vehicle must be stationary when position **P** is selected.

Reverse (R)

The vehicle must be stationary when position **R** is selected.

Neutral position (N)

No gear is engaged and the engine can be started with the gear selector in this position. Apply the parking brake if the vehicle is stationary with the gear selector in position **N**.

Drive (D)

D is the normal driving position. The car automatically shifts between the various forward gears, based on the level of acceleration and speed. The car must be at a standstill when shifting from position **R** to position **D**.

Sport (S)[2]

Sport mode offers more immediate engine response and allows the transmission to shift up at higher rpm.

To access Sport mode (**S**), move the gear selector to the right from Drive (**D**). The information display will change from **D** to **S**.

Sport mode can be selected at any time.

[1] The information display (see page 71) shows the gear selector's position or the selected gear by displaying the following: P, R, N, D, S, 1, 2, 3, 4, 5, or 6.
[2] Available in certain markets only, on models with 6-cylinder turbo engines.

Transmission

Geartronic–manual shifting

Geartronic allows you to manually shift among your vehicle's six forward speeds. Geartronic can be selected at any time.

- To access the manual (**M**) shifting position from Drive (**D**), move the gear selector to the right to **M** (or to **S** on models equipped with Sport mode).

NOTE

On models equipped with Sport mode, the transmission will not switch to manual shifting mode until the gear selector is moved forward or rearward. The selected gear will then be shown in the information display (see page 71).

- To return to the **D** position from **M** or **S**, move the gear selector to the left.

While driving

- If you select the **M** position while driving, the gear that was being used in the Drive position will also initially be selected in the **M** position.
- Move the gear selector forward (toward "+") to shift to a higher gear or rearward (toward "–") to shift to a lower gear.
- If you hold the gear selector toward "–", the transmission will downshift one gear at a time and will utilize the braking power of the engine. If the current speed is too high for using a lower gear, the downshift will not occur until the speed has decreased enough to allow the lower gear to be used.
- If you slow to a very low speed, the transmission will automatically shift down.

Shiftlock – Neutral (N)

If the gear selector is in the **N** position and the vehicle has been stationary for at least 3 seconds (irrespective of whether the engine is running) then the gear selector is locked.

To be able to move the gear selector from **N** to another gear position, the brake pedal must be depressed and the ignition must be in position **II**, see page 77.

Geartronic–starting on slippery surfaces

Selecting 3rd gear in Geartronic's manual shifting mode can help provide better traction when starting off on slippery surfaces. To do so:

1. Depress the brake pedal and move the gear selector to the right from the **D** position to **M**. The text in the instrument panel display will change from D to 1.
2. Press the gear selector forward and release it (this selects 2nd gear). Press the selector forward again and release it to select 3rd gear.
3. Release the brake pedal and press gently on the accelerator pedal.

Shiftlock override

If the vehicle cannot be driven, for example because of a dead battery, the gear selector must be moved from the **P** position so that the vehicle can be moved[3].

1. Lift away the rubber mat on the floor of the storage compartment behind the center console and open the hatch.
2. Insert the key blade into the opening as far as possible. Press the key blade down and keep it held down. Move the gear selector from the **P** position. For information on the key blade, see page 52.

[3] If the battery is dead, the optional electric parking brake cannot be applied or released. Connect an auxiliary battery if the battery voltage is too low, see page 105.

All Wheel Drive – AWD[4]

Your Volvo can be equipped with permanent All Wheel Drive, which means that power is distributed automatically between the front and rear wheels. Under normal driving conditions, most of the engine's power is directed to the front wheels. However, if there is any tendency for the front wheels to spin, an electronically controlled coupling distributes power to the wheels that have the best traction.

NOTE

The message **AWD disabled Service required** will be appear in the information display if an electrical fault should occur in the AWD system. A warning light will also illuminate in the instrument panel. If this occurs, have the system checked by a trained and qualified Volvo service technician.

4 Standard on certain models.

Brakes

Brake system

The brake system is a hydraulic system consisting of two separate brake circuits. If a problem should occur in one of these circuits, it is still possible to stop the vehicle with the other brake circuit.

If the brake pedal must be depressed farther than normal and requires greater foot pressure, the stopping distance will be longer.

A warning light in the instrument panel will light up to warn the driver that a fault has occurred.

If this light comes on while driving or braking, stop immediately and check the brake fluid level in the reservoir.

NOTE

Press the brake pedal hard and maintain pressure on the pedal – do not pump the brakes.

WARNING

If the fluid level is below the **MIN** mark in the reservoir or if a brake system message is shown in the information display: **DO NOT DRIVE**. Have the vehicle towed to a trained and qualified Volvo service technician and have the brake system inspected.

Power brakes function only when the engine is running

The power brakes utilize vacuum pressure which is only created when the engine is running. Never let the vehicle roll to a stop with the engine switched off.

If the power brakes are not working, the brake pedal must be pressed approximately five times harder than usual to make up for the lack of power assistance. This can happen for example when towing your vehicle or if the engine is switched off when the vehicle is rolling. The brake pedal feels harder than usual.

Water on brake discs and brake pads affects braking

Driving in rain and slush or passing through an automatic car wash can cause water to collect on the brake discs and pads. This will cause a delay in braking effect when the pedal is depressed. To avoid such a delay when the brakes are needed, depress the pedal occasionally when driving through rain, slush, etc. This will remove the water from the brakes. Check that brake application feels normal. This should also be done after washing or starting in very damp or cold weather.

Severe strain on the brake system

The brakes will be subject to severe strain when driving in mountains or hilly areas, or when towing a trailer. Vehicle speed is usually slower, which means that the cooling of the brakes is less efficient than when driving on level roads. To reduce the strain on the brakes, shift into a lower gear and let the engine help with the braking. Do not forget that if you are towing a trailer, the brakes will be subjected to a greater than normal load.

Anti-lock braking system

The Anti-lock Braking System (ABS) helps to improve vehicle control (stopping and steering) during severe braking conditions by limiting brake lockup. When the system "senses" impending lockup, braking pressure is automatically modulated in order to help prevent lockup that could lead to a skid.

The system performs a brief self-diagnostic test when the engine has been started and driver releases the brake pedal. Another automatic test may be performed when the vehicle first reaches a speed of approximately 25 mph (40 km/h). The brake pedal will pulsate several times and a sound may be audible from the ABS control module. This is normal.

Cleaning the brake discs

Coatings of dirt and water on the brake discs may result in delayed brake function. This delay is minimized by cleaning the brake linings.

Cleaning the brake pads is advisable in wet weather, prior to long-term parking, and after the vehicle has been washed. Do this by brak-

ing gently for a short period while the vehicle is moving.

Emergency Brake Assistance

EBA is designed to provide full brake effect immediately in the event of sudden, hard braking. The system is activated by the speed with which the brake pedal is depressed.

When the EBA system is activated, the brake pedal will go down and pressure in the brake system immediately increases to the maximum level. Maintain full pressure on the brake pedal in order to utilize the system completely. EBA is automatically deactivated when the brake pedal is released.

NOTE

- When the EBA system is activated, the brake pedal will go down and pressure in the brake system immediately increases to the maximum level. You must maintain full pressure on the brake pedal in order to utilize the system completely. There will be no braking effect if the pedal is released. EBA is automatically deactivated when the brake pedal is released.
- When the vehicle has been parked for some time, the brake pedal may sink more than usual when the engine is started. This is normal and the pedal will return to its usual position when it is released.

Symbols in the instrument panel

Symbol	Specification
BRAKE	Steady glow – Check the brake fluid level. If the level is low, fill with brake fluid and check for the cause of the brake fluid loss.
ABS	Steady glow for two seconds when the engine is started – There was a fault in the brake system's ABS function when the engine was last running.

WARNING

If ABS and BRAKE come on at the same time and the brake level is below the **MIN** mark in the reservoir or if a brake system-related message is shown in the information display: **DO NOT DRIVE**. Have the vehicle towed to a trained and qualified Volvo service technician and have the brake system inspected.

Hill Descent Control (HDC)

Introduction[1]

Normally, when the accelerator pedal is released while driving down hills, the vehicle's speed slows as the engine runs at lower rpm (the normal engine braking effect). However, if the downhill gradient becomes steeper and if the vehicle is carrying a load, speed increases despite the engine braking effect. In this situation, the brakes must be applied to reduce the vehicle's speed.

HDC is a type of automatic engine brake and makes it possible to increase or decrease the vehicle's speed on downhill gradients using only the accelerator pedal, without applying the brakes. The brake system functions automatically to maintain a low and steady speed.

HDC is particularly useful when driving down steep hills with rough surfaces, and where the road may have slippery patches.

WARNING

HDC does not function in all situations, and is a supplementary braking aid. The driver has full responsibility for driving in a safe manner.

Function

- HDC can be switched on and off with the button in the center console. An indicator light in the button illuminates when HDC is activated.
- The indicator light in the instrument panel illuminates and a message is displayed when the system is controlling the vehicle's speed.
- HDC only functions when **first** or **reverse** gears are selected (1 will be shown in the instrument panel display when first gear is selected).

NOTE

HDC cannot be activated if the gear selector is the **D** position.

Using HDC

HDC allows the car to roll forward at a maximum speed of 6 mph (10 km/h), and 4 mph (7 km/h) in reverse. However, the accelerator pedal can be used to select any speed that is possible in first or reverse gears. When the accelerator pedal is released, speed is quickly reduced again to 6 mph (10 km/h) or 4 mph (7 km/h), depending on the gear selected, regardless of the hill's gradient. It is not necessary to apply the brakes.

- The brake lights illuminate automatically when HDC is controlling the vehicle's speed.
- The driver can slow or stop the vehicle at any time by applying the brakes.

HDC is deactivated when:

- The button on the center console is pressed
- A gear higher than first gear is selected
- **D** is selected on vehicles with an automatic transmission

[1] HDC is only available on the XC70, on which it is standard equipment.

Hill Descent Control (HDC)

HDC can be deactivated at any time. If this is done while driving down a steep hill, the system's braking effect will decrease gradually.

NOTE

Engine response to pressure on the accelerator pedal may be slightly slower than normal when HDC is activated.

Parking brake

Electric parking brake

An electric parking brake has the same function as a manual parking brake.

NOTE

- A faint sound from the parking brake's electric motor can be heard when the parking brake is being applied. This sound can also be heard during the automatic function check of the parking brake.
- The brake pedal will move slightly when the electric parking brake is applied or released.

Low battery voltage

If the battery voltage is too low, the parking brake cannot be applied or released. Connect an auxiliary battery if the battery voltage is too low, see page 105.

Applying the electric parking brake

Parking brake control

1. Press firmly on the brake pedal.
2. Push the control.
3. Release the brake pedal and ensure that the vehicle is at a standstill.
4. When the vehicle is parked, the gear selector must be in position **P**.

The PARK BRAKE symbol in the instrument panel flashes while the parking bake is being applied, and glows steadily when the parking brake has been fully applied.

NOTE

- In an emergency the parking brake can be applied when the vehicle is moving by holding in the control. Braking will be interrupted when the accelerator pedal is depressed or the control is released.
- An audible signal will sound during this procedure if the vehicle is moving at speeds above 6 mph (10 km/h).

Parking on a hill

- If the vehicle is pointing uphill, turn the front wheels so that they point away from the curb.
- If the vehicle is pointing downhill, turn the front wheels so that they point toward the curb.

Releasing the electric parking brake

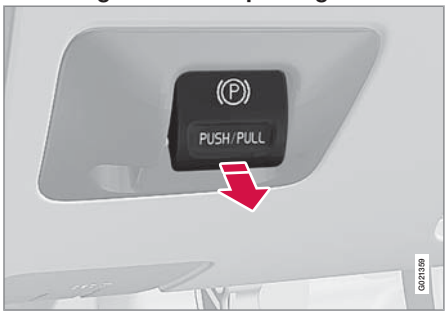

Parking brake control

Manual release

1. Fasten the seat belt.
2. Insert the remote key in the ignition slot.
3. Press firmly on the brake pedal.
4. Pull the parking brake control.

Vehicles with Keyless drive (option)

1. Press the **START/STOP ENGINE** button.
2. Press firmly on the brake pedal.
3. Pull the parking brake control.

Automatic release

1. Start the engine.

NOTE

- For safety reasons, the parking brake is only released automatically if the engine is running and the driver is wearing a seat belt.
- The electric parking brake will be released immediately when the accelerator pedal is pressed and the gear selector is in position **D** or **P**.

2. Fasten the seat belt
3. Move the gear selector to position **D** or **R** and press the accelerator pedal. The parking brake will release when the vehicle begins to move.

Heavy load uphill

A heavy load, such as a trailer, can cause the vehicle to roll backward when the parking brake is released automatically on a steep incline. To help avoid this:

1. Keep the electric parking brake lever pushed in with the left hand while shifting into Drive with the right.
2. While pressing the throttle pedal to pull away, release the parking brake lever only after the vehicle begins to move.

Symbols

Symbol	Specification
(P)!	Read the message in the information display
PARK BRAKE	A flashing symbol indicates that the parking brake is being applied. If the symbol flashes in any other situation then this means that a fault has arisen. Read the message on the information display.

Messages

Parking brake not fully released – A fault is preventing the parking brake from being released. Contact an authorized Volvo work-

Parking brake

shop. If you drive off with this error message showing, a warning signal sounds.

Parking brake not applied – A fault is preventing the parking brake from being applied. Try to apply and release. Contact a Volvo workshop if the message remains.

Parking brake Service required – A fault has arisen. Contact a Volvo workshop if the fault remains.

WARNING

If the vehicle must be parked before the fault has been corrected, always put the gear selector in **P** and turn the wheels so that they point away from the curb if the vehicle is pointing uphill or toward the curb if it is pointing downhill.

Menus and messages..... 120
Climate system..... 124
Audio system..... 131
Bluetooth® hands-free connection..... 143
Rear Seat Entertainment - Dual Screen (RSE)–option 149
Trip computer..... 152
Compass..... 153
Stability system..... 155
Active chassis system–Four C..... 157
Cruise control..... 158
Collision warning with Auto-brake (option)..... 160
Adaptive Cruise Control–ACC (option)..... 166
Distance alert 173
Driver Alert System (option) 176
Park assist (option)..... 181
Blind Spot Information System (option)..... 184
Passenger compartment convenience..... 188

G020908

COMFORT AND DRIVING PLEASURE

04

Menus and messages

Center console

Certain functions are controlled from the center console via the menu system or from the optional keypad in the steering wheel. Each function is described under its respective section.

The current menu level is shown at the top right of display in the center console.

Center console controls

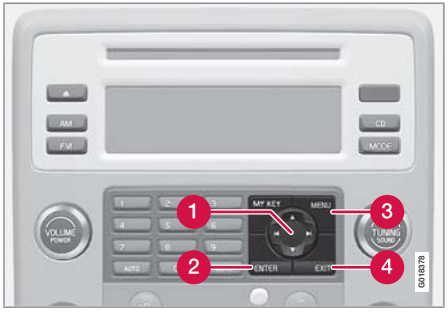

Center console with information display and controls for menus

1. Navigation button – scrolls and selects among menu options
2. **ENTER** – selects menu options
3. **MENU** – accesses the menu system
4. **EXIT** – leads back one step in the menu structure. A long press exits the menu system.

Steering wheel keypad

1. **ENTER**
2. **EXIT**
3. Navigation buttons.

If the steering wheel keypad has **ENTER** and **EXIT,** the buttons 1 to 3 have the same function as those in the center console.

Search paths

Access to some functions is provided directly via the function buttons and others are access through the menu system.

Search paths to the menu system functions are listed as follows: **Car settings ➔ Lock settings**, if the following steps have been taken first:

1. Press **MENU**.
2. Scroll to **Menu** and press **ENTER**.
3. Scroll to **Submenu** and press **ENTER**.

The navigation button can be used instead of **ENTER** and **EXIT** when navigating the menu hierarchy. The right arrow is equal to **ENTER** and the left arrow to **EXIT**.

The menu options are numbered and can also be selected directly with the numerical keypad (1 – 9 only).

Menu overview

NOTE

Menu selections will not be available (will be "grayed out") when the vehicle is moving.

Car key memory

Seat & mirror positions

Car settings

Fold mirr. when locking (option on certain markets only)

Collision warning settings (option)

Light settings

Lock settings

Reduced guard[1]

Parking camera settings (accessory)

Steering force level (option)

Information

Climate settings

Automatic blower adjust

Recirculation timer

Auto. rear defroster

Reset climate settings

Main menu AM

Audio settings[2]

Sound stage

Equalizer, front

Equalizer, rear

Auto. volume control

Resets all audio settings.

Main menu FM

FM settings

Radio text

Advanced radio settings

Audio settings

Main menu CD

Random

Off

Folder

Disc

Single disc

All discs

CD settings

Disc text (option)

Audio settings

Main menu AUX

Volume, AUX input

Audio settings

Main instrument panel

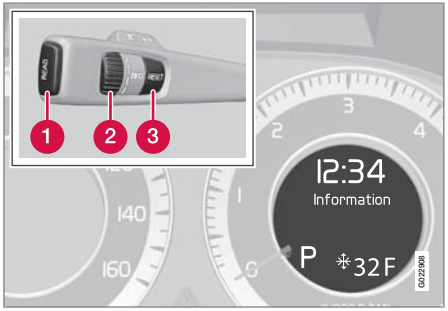

Information display and menu controls

1. **READ** – access to the list of messages and message confirmation.
2. Thumbwheel – browse among menus and options in the list of functions.
3. **RESET** – reset the active function. Used in certain cases to select/activate a function, see the explanation under each respective function.

The menus shown on the information displays in the instrument panel are controlled with the left lever. The menus shown depend on ignition mode. Press **READ** to erase a message and return to the menus.

[1] Certain models

[2] The menu option for audio settings is available in all audio sources.

Menus and messages

Menu overview
Driving distance on current fuel reserve

Average

Instantaneous:

Average speed

Current speed in mph (Canadian models only)

DSTC

Message

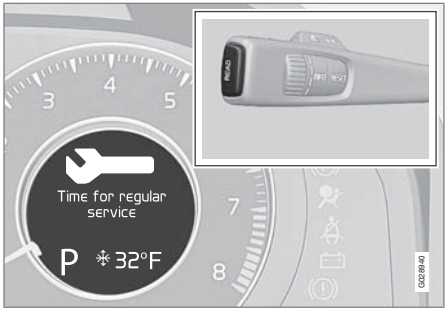

When a warning, information or indicator symbol comes on, a corresponding message appears on the information display. An error message is stored in a memory list until the fault is rectified.

Press **READ** to acknowledge and scroll among the messages.

NOTE

If a warning message appears while you are using the trip computer, the message must be read and confirmed by pressing **READ** before the previous activity can be resumed.

Message	Description
Stop safely	Stop and switch off the engine. Serious risk of damage. Contact an authorized Volvo workshop.
Stopping the engine	Stop and switch off the engine. Serious risk of damage. Contact an authorized Volvo workshop.
Service urgent	Have the vehicle checked by an authorized Volvo workshop immediately.

Message	Description
Service required	Have the vehicle checked by an authorized Volvo workshop as soon as possible.
See manual	Read the owner's manual.
Book time for maintenance	Time to book service at an authorized Volvo retailer.
Time for regular maintenance	Time for regular service at an authorized Volvo workshop. The timing is determined by the number of miles driven, number of months since the last service, engine running time.

Message	Description
Maintenance overdue	If the service intervals are not followed, the warranty does not cover any damaged parts. Contact an authorized Volvo workshop for service.
Temporarily OFF	A function has been temporarily switched off and is reset automatically while driving or after starting again.
Power save mode	The audio system is switched off to save current. Charge the battery.

Climate system

Introduction

Air conditioning
The vehicle is equipped with Electronic Climate Control (ECC). The climate control system cools, heats or dehumidifies the air in the passenger compartment.

NOTE

- The air conditioning can be switched off, but to ensure the best possible climate comfort in the passenger compartment and to prevent the windows from misting, it should always be on.
- In warm weather, a small amount of water may accumulate under the car when it has been parked. This water is condensation from the A/C system and is normal.

Sensor location

- The sunlight sensor is located on the top side of the dashboard.

NOTE

The sunlight sensor monitors which side of the car that is most exposed to sunlight. This can mean that the temperature may differ between the right and left-side air vents, even if the temperatures set for both sides of the passenger compartment are the same.

- The temperature sensor for the passenger compartment is located below the climate control panel.
- The outside temperature sensor is located on the door mirror.
- The humidity sensor (option) is located in the interior rearview mirror.

NOTE

Do not cover or block the sensors with clothing or other objects.

Side windows and moonroof
To ensure that the air conditioning works optimally, the side windows, and the optional moonroof should be closed.

Fog on the inside of the windows
The defroster function should be used to remove fog or mist from the inside of the windows. Keeping the windows clean with a commercially available window washing spray will also help prevent fogging or misting.

Temporary shut-off of the air conditioning
The air conditioning is momentarily disengaged during full-throttle acceleration or when driving uphill with a trailer. This may result in a temporary increase in cabin temperature.

Ice and snow
Always keep the air intake grille at the base of the windshield free of snow.

Climate system maintenance
Special tools and equipment are required to maintain and carry out repairs on the climate system. Work of this type should only be done by a trained and qualified Volvo service technician.

Refrigerant
Volvo cares about the environment. The air conditioning system in your car contains a CFC-free refrigerant – R134a. This substance will not deplete the ozone layer. The air conditioning system contains 1.8 lbs (800 g) of R134a. The systems uses PAG oil.

Passenger compartment filter
Replace the cabin air filter with a new one at the recommended intervals. Please refer to

your Warranty and Service Records Information booklet, or consult a trained and qualified Volvo service technician for these intervals. The filter should be replaced more often when driving under dirty and dusty conditions. The filter cannot be cleaned and therefore should always be replaced with a new one.

NOTE

There are different types of cabin air filters. Ensure that the correct type is installed.

Interior Air Quality System (IAQS)

A multifilter helps reduce gases and particles in the incoming air, thereby reducing the levels of odors and contaminants entering the vehicle. The air quality sensor detects increased levels of contaminants in the outside air. When the air quality sensor detects contaminated outside air, the air intake closes and the air inside the passenger compartment is recirculated, i.e. no outside air enters the vehicle. The filter also cleans recirculated passenger compartment air.

NOTE

Contact your Volvo retailer for IAQS air filter replacement intervals.

Menu settings

The default settings for three of the climate system's functions can be changed in the menu system, see page 120:

- Blower speed in automatic mode, see page 127.
- Recirculation timer for passenger compartment air, see page 127.
- Automatic rear window defrosting, see page 97.

The functions can also be returned to factory settings in the menu system.

Air distribution

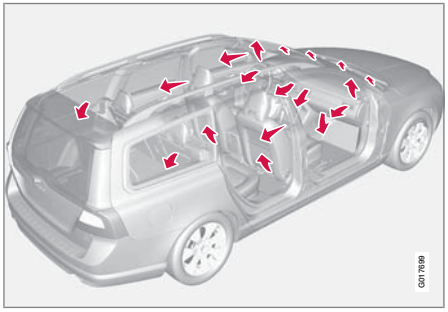

The incoming air is distributed from 20 different vents in the passenger compartment.

Air distribution is fully automatic in **AUTO** mode.

If desired, air distribution can be controlled manually, see page 130.

Air vents in the dashboard

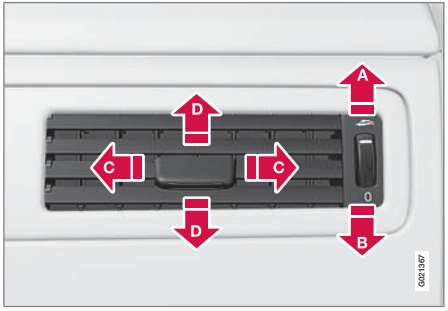

A Open

B Closed

C Horizontal airflow

D Vertical airflow

Direct the outer air vents toward the side windows to defrost.

Climate system

Air vents in the door pillars

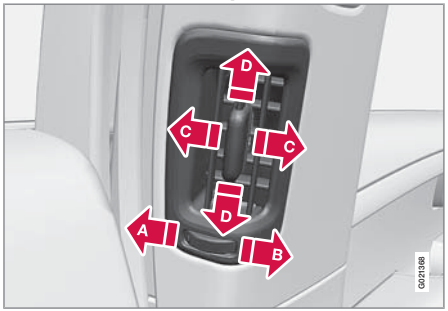

A Open

B Closed

C Horizontal airflow

D Vertical airflow

Direct the outer air vents toward the side windows to defrost.

Direct the vents into the passenger compartment to maintain a comfortable climate in the rear seat.

Electronic climate control, ECC

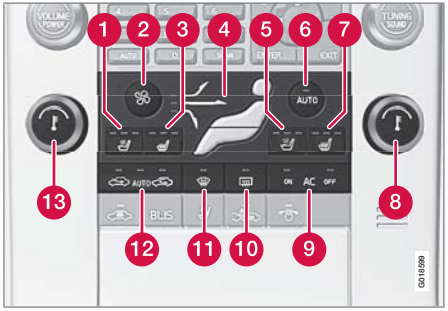

1 Ventilated front driver's seat (option)

2 Blower

3 Heated front driver's seat (option)

4 Air distribution

5 Ventilated front passenger's seat (option)

6 Auto

7 Heated front passenger's seat (option)

8 Temperature control, passenger's side

9 A/C – On/Off

10 Heated rear window and door mirrors, see page 97.

11 Defroster (maximum effect)

12 Recirculation/Air quality system

13 Temperature control, driver's side

Ventilated front seats (option)

The ventilation system consists of fans in the seats and backrests that draw air through the seat upholstery. The cooling effect increases as the air in the passenger compartment becomes cooler.

The ventilation is controlled by the ECC system, which takes into account the seat temperature, sunlight in the passenger compartment, and the ambient temperature.

The ventilation can be used at the same time as seat heating.

The ventilation system can be activated when the engine is running. There are three comfort levels that produce different cooling and dehumidification effects:

- Level three: press the button once for maximum output – three indicator lights come on.
- Level two: press the button twice for a lower output – two indicator lights come on.

- Level one: press the button three times for the lowest output – one indicator light comes on.
- Press the button a fourth time to switch off the function – the indicator light will go out.

Blower control

Turn the control clockwise to increase or counterclockwise to decrease the blower speed. Pressing the **AUTO** switch will automatically regulate blower speed and override manual adjustment.

NOTE

If the blower is turned off completely, the air conditioning is disengaged, which may result in fogging on the windows.

Heated front seats (option)

Press the button once for the highest heat level – three indicator lights come on.

Press the button twice for a lower heat level – two indicator lights come on.

Press the button three times for the lowest heat level – one indicator light comes on.

Press the button four times to switch off the heat – no indicator lights come on.

Heated rear seats[1]

Heat control for the outboard seating positions takes place in the same way as for the front seat.

Air distribution

The figure consists of three buttons. When the buttons are pressed, an indicator light in front of the respective part of the figure illuminates and shows which air distribution is selected, see page 130.

Auto

The function automatically regulates cooling, heating, blower speed, recirculation, and air distribution to maintain the chosen temperature. If you select one or more manual functions, the other functions continue to be controlled automatically. The air quality sensor is engaged and all manual settings are switched off when **AUTO** is pressed. The display shows **AUTO CLIMATE**.

Blower speed in automatic mode can be set under **Climate settings ➔ Automatic blower adjust**. Choose between **Low**, **Normal** or **High**.

NOTE

Selecting the lowest blower speed may increases the risk of fog forming on the windows.

For a description of the menu system, see page 120.

[1] Option on Canadian models only.

Climate system

Temperature control

The temperatures on the driver and passenger sides can be set independently. When the vehicle is started, the most recent setting is resumed.

NOTE

Heating or cooling cannot be speeded up by selecting a higher/lower temperature than the actual temperature required.

A/C – ON/OFF

The air conditioning is controlled automatically by the system when the **ON** light is on. This cools/heats and dehumidifies the incoming air. When the **OFF** light is on, the air conditioning is always disengaged. Other functions are still controlled automatically. When defroster is selected, the air conditioning system is set for maximum blower speed and dehumidification.

Defroster

This function defrosts/de-ices the windshield and front side windows. The indicator light in the defroster button lights when the function is active.

- Blower speed increases automatically and the air conditioning will switch on (if not already on and if the passenger compartment blower is not turned off) to dehumidify the air in the passenger compartment. Air conditioning can be switched off by pressing the **AC** button.
- Recirculation will not function while defrost is engaged.

The climate system will return to its previous settings when the defroster function is switched off.

Recirculation/air quality system

Recirculation

This function can be used to shut out exhaust fumes, smoke, etc from the passenger compartment. The air in the passenger compartment is then recirculated, i.e., no air from outside the car is taken into the car when this function is activated. The indicator light in the button will illuminate when recirculation is selected.

If the air in the car recirculates for too long, there is a risk of condensation forming on the insides of the windows, especially in winter.

Timer

The timer function minimizes the risk of fogging, or stale air when the recirculation function is selected by automatically switching off the function after a certain length of time, depending on the ambient temperature. Activate/deactivate the function under **Climate control settings ➔ Recirculation timer**. For a description of the menu system, see page 120.

NOTE

When Defroster is selected, recirculation is always deactivated.

Interior Air Quality System–IAQS (option)

This system consists of a multifilter and an air quality sensor. The filter helps remove gases and particles from the incoming air, thereby reducing the amounts of odors and contaminants entering the vehicle. The air quality sensor detects increased levels of contaminants in the outside air. When the air quality sensor detects contaminated outside air, the air intake closes and the air inside the passenger compartment is recirculated, i.e., no outside air enters the vehicle. The filter also cleans recirculated passenger compartment air. When the **AUTO** button is depressed the air quality sensor is always engaged.

Activating the air quality sensor

Switch between the three functions by pressing the button repeatedly.

- The left orange light comes on – the air quality sensor is disengaged.
- The center green light comes on – recirculation not engaged, providing it is not required for cooling in hot weather.
- The right orange light comes on – recirculation is engaged.

NOTE

- The air quality sensor should always be engaged in order to obtain the best air in the passenger compartment.
- Recirculation is limited in cold weather to avoid fogging.
- If the insides of the windows start fogging, disengage the air quality sensor. Use the defroster function to increase airflow to the front, side, and rear windows.

Climate system

Air distribution table

	Air distribution	Use		Air distribution	Use
	Air to windows. Some air flows from the dashboard air vents. The air is not recirculated. Air conditioning is always engaged.	To remove de-fog/de-ice the front side windows and windshield quickly.		Air to the floor and windows. Some air flows from the dashboard air vents.	To ensure comfortable conditions and good de-fogging in cold or humid weather.
	Air to windshield and side windows. Some air flows from the air dashboard vents.	In cold or humid weather (blower speed should be moderate to high).		Air to floor and from dashboard air vents.	In sunny weather with cool outside temperatures.
	Airflow to windows and from dashboard air vents.	To ensure good comfort in warm, dry weather.		Air to floor. Some air flows to the dashboard air vents and windows.	To warm or cool the feet.
	Airflow to the head and chest from the dashboard air vents.	To ensure efficient cooling in warm weather.		Airflow to windows, from dashboard air vents and to the floor.	To cool the feet or provide warmer air to the upper body in cold weather or hot, dry weather.

Introduction

The audio system is available in two versions: High Performance och Premium Sound. The system version is shown in the display when the audio system is switched on.

If the audio system is on when the ignition is switched off, it will come on automatically the next time the ignition is put in mode **I** or higher. The audio system can be operated without a key in the ignition slot for 15 minutes at a time by pressing the **POWER** button (the driver's door must be closed on vehicles with the optional keyless drive).

Some functions are controlled from the menu system in the center console. For more information on menus, see page 120.

Dolby Surround Pro Logic II and the symbol are trademarks of Dolby Laboratories Licensing Corporation. The Dolby Surround Pro Logic II System is manufactured under license from Dolby Laboratories Licensing Corporation.

Overview

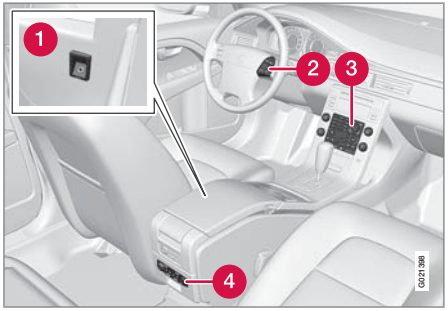

1. Socket for external audio source (AUX, USB, iPod) - option
2. Steering wheel keypad
3. Center console control panel
4. Control panel with headphones socket (option)

Steering wheel keypad

1. Confirm selection in menu system and controls for a bluetooth-connected cell phone (see page 143).
2. Go higher in the menu system. Interrupt current function.
3. Volume
4. A short press scrolls between CD tracks or preset radio stations. A long press searches within CD tracks or searches for radio stations automatically.

Audio system

USB/iPod connector (option)

An auxiliary device, such as an iPod, MP3 player or a USB flash drive can be connected to the audio system via the connector in the center console storage compartment. A standard cable from an iPod or MP3 player can be routed under the cover to the AUX connector in the storage compartment.

A sound source must be chosen, depending on the device that has been connected:

1. Use **MODE** to select iPod or USB. The text CONNECT DEVICE will be displayed.
2. Connect the device to the connector in the center console storage compartment (see the illustration).

The text LOADING will be displayed while the system loads the files (folder structure) on the device. This may take a short time.

When information about the files (the folder structure) on the device has been loaded, the resulting list includes information on the artist, genre and song title.

To navigate in the folder structure, press **ENTER** and scroll up and down the folders using the arrow buttons (on the audio system control panel or on the steering wheel keypad). Press the right arrow button to select a folder. Press the left arrow button to go up a level in the folder structure. Press **ENTER** to go down a level in the folder structure.

Tracks can be selected in two ways:

- Turn the Tuning knob clockwise or counterclockwise
- Use the right or left arrow keys on the navigation control to select the desired track. The arrow keys on the steering wheel keypad can also be used in the same way.

NOTE

The system supports playback of files in the most common versions of formats such as mp3, wma, and wav. However, there may be versions of these formats that the system does not support.

USB flash drive

To simplify the use of a USB flash drive, it is advisable to only store music files on the drive. It will take considerably longer for the system to index the files on the drive if it contains anything other than compatible music files.

MP3 player

Many mp3 players have a file indexing system that is not supported by the vehicle's audio system. In order to use an mp3 player, the system must be set to USB Removable device/ Mass Storage Device.

iPod

An iPod receives current and its battery is charged through the connecting cord. However, if the iPod's battery is completely drained, it should be recharged before the iPod is connected to the audio system.

NOTE

When an iPOD is used as a sound source, the vehicle's audio system has a menu structure similar to the one in the iPOD. See the iPOD's manual for detailed information.

For further information, refer to the accessory manual USB/iPod Music Interface.

Rear control panel with headphones socket (option)

Headphones with an impedance of 16 – 32 ohm and sensitivity of 102 dB or higher are recommended for best sound reproduction.

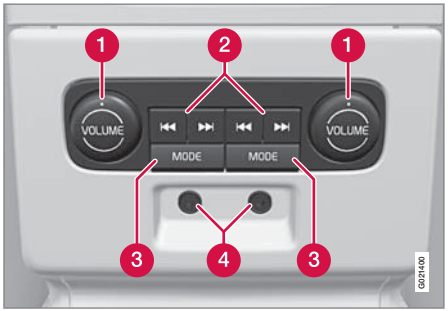

1. Volume
2. Scroll/search forward and backward
3. Audio source, activating
4. Headphones sockets (3.5 mm) – accessory

Activating/deactivating

The control panel is activated by pressing **MODE** when the audio system is switched on. It is switched off automatically when the audio system is switched off or by a long press on **MODE**.

Scroll/search forward and backward

Short presses on (2) are used to scroll between CD tracks or preset radio stations. Long presses are used to fast-wind CD tracks or to search for radio stations automatically.

Limitations

The audio source (FM, AM, CD, etc.) being played in the speakers cannot be controlled from the rear control panel.

Menu control and MY KEY

Certain functions can be controlled from the menu system in the center console. For more information on menus, see page 120.

Storing your favorite functions with MY KEY

1. Select the function in the menu to be stored. Only certain functions can be stored.
2. Press and hold **MY KEY** for more than two seconds.

Activate the stored function by pressing **MY KEY** briefly.

The following functions can be programmed using MY KEY:

FM

Radio text on/off

Audio settings

Sound stage (front/driver/rear)

Auto. volume control (off/low/medium/high)

Sirius satellite radio (option)

Add song to memory

Direct channel entry

Song seek (on/off)

Sirius settings – Song memory (show memory list)

CD/CD changer

Random (CD changer)

Disc text (on/off)

Track information (on/off)

Car settings

Fold mirror when locking

Audio system

Audio functions

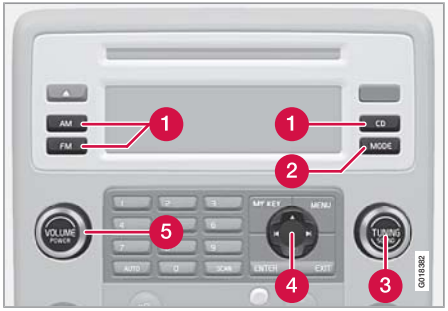

Center console, controls for audio functions

1. Internal audio sources: AM, FM and CD
2. External audio source. For connection, see page 131
3. Push button and knob controls for making sound settings
4. Navigation button
5. Volume and on/off

Audio volume and automatic volume control

The audio system compensates for disrupting noises in the passenger compartment by increasing the volume according to the speed of the vehicle. The level of sound compensation can be set at low, medium or high. Select the level under **Audio settings ➔ Auto volume control**.

External audio source audio volume

External devices such as an MP3 player can be connected to the AUX input, see page 131. The volume of the external sound source AUX may be different from the volume of the internal sound sources such as the CD player or the radio. If the external sound source's volume is too high, the quality of the sound may be impaired. To help prevent this, adjust the input volume of the external audio source:

1. Set the audio system in AUX mode using **MODE** and use (4) to navigate to **Volume, AUX input**.
2. Turn the control (3) or press ▶|/|◀ the navigation button.

Sound settings

Press the control (3) repeatedly to toggles among the sound settings. Adjustments are made by turning the control (3).

- **Bass** – Bass level.
- **Treble** – Treble level.
- **Fader** – Balance between the front and rear speakers.
- **Balance** – Balance between the right and left speakers.
- **Subwoofer** (option on certain markets only) – Level for the bass speaker. The subwoofer can be switched off by turning control (3) counterclockwise to **MIN**. The location of the subwoofer is shown in the illustration.

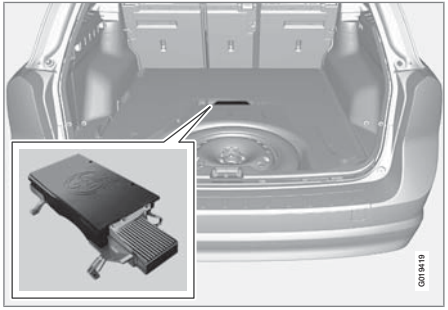

- **Surround** (option) – Surround settings.

Under **Surround,** 3 channel stereo or Dolby Surround Pro logic II can be activated by selecting **3-ch** or **Dpl2** respectively. This enables the following options:

- Center level[1] – Level for the center speaker.
- Surround level[1] – Level for surround sound.

Equalizer

Sound levels for different frequencies can be adjusted separately using the equalizer[2].

1. Go to Audio settings and select Equalizer Front or Equalizer Rear.

   The sound level for the frequency is adjusted with ▲/▼ on the navigation button. Press ▶|/|◀ to select another frequency.

2. Use **ENTER** to save or **EXIT** to close.

Sound stage[3]

The sound experience can be optimized for the driver's seat, both front seats or the rear seat. Select one of the options under Audio settings ➔ Soundstage.

Optimal sound reproduction

The audio system is calibrated for optimal sound reproduction using digital signal processing.

This calibration takes into account factors such as the speakers, amplifier, cabin acoustics, the listeners' seating positions, etc., for each combination of vehicle/audio system.

There is also a dynamic calibration that takes into consideration the volume level, radio reception, and the speed of the vehicle.

The settings that are described in this manual, such as Bass, Treble, and Equalizer are only intended to enable the user to adapt sound reproduction to his/her personal tastes.

CD functions

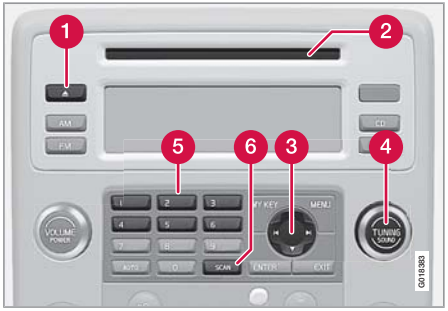

Center console, controls for CD functions

1. CD insert and eject
2. CD slot
3. Navigation button for changing CD tracks
4. Fast-back and change CD track
5. CD changer position selection (option)
6. Scan CD

[1] Premium Sound
[2] Certain audio systems
[3] Certain markets only.

Audio system

Playing a CD (CD player[4])
If a music CD is in the player when **CD** is pressed, it will be played automatically. Otherwise, insert a disc and press **CD**.

Playing a CD (CD changer)
If a CD position with a music CD is already selected when **CD** is pressed, it will be played automatically. Otherwise select a disc with the number buttons **1 – 6** or ▲/▼ on the navigation button.

Insert a CD (CD changer)
1. Select an empty position with the number buttons **1 – 6** or ▲/▼ on the navigation button.
   > An empty position is marked on the display. The text **Insert disc** shows that a new disc can be inserted. The CD changer can hold up to six CDs.
2. Insert a CD in the CD changer slot.

Disc eject
For reasons of traffic safety, an ejected CD must be removed within 12 seconds or it will be automatically drawn back into the slot and the CD player will enter pause mode. Press the CD button to restart the disc.

Eject individual discs by pressing the eject button.

Eject all discs with a long press on the eject button. The entire magazine is emptied disc by disc.

NOTE

The Eject all function can only be used while the vehicle is at a standstill and will be cancelled if the vehicle begins to move.

Pause
When the audio system volume is turned off completely, the CD player will pause and will resume playing when the volume is turned up again.

Sound files
In addition to playing normal music CDs, the CD player/changer can also play discs containing files in mp3 or wma format.

NOTE

Some copy protected sound files may not be read by the player.

When a CD containing sound files is inserted into the player the disc's directory structure is scanned before the CD begins playing. The length of time that this takes depends on the quality of the disc.

Navigating the disc and playing tracks
If a disc containing sound files is inside the CD player, press **ENTER** to display the disc's directory structure. The directory structure is navigated in the same way as the audio system's menu structure. Sound files have the ♩ symbol and directories have the 🗀 symbol. Press **ENTER** to play a selected folder or a file.

When the music file has been played, the player will continue to play the rest of the files in the current folder. When all of the files in the folder have been played, the player will automatically go to the next folder and play the files in it.

Fast-forward/change CD tracks and sound files
Short presses ▶|/|◀ on the navigation button are used to scroll between CD tracks/sound files. Long presses are used to search within CD tracks/sound files. **TUNING** (or the steering wheel keypad) can also be used for this purpose.

[4] Certain markets only.

Scan CD
This function plays the first ten seconds of each CD track/sound file. Press **SCAN** to activate. Interrupt with **EXIT** or **SCAN** to continue playing the current CD track/sound file.

Random
This function plays the tracks in random order (shuffle). The random CD tracks/sound files can be scrolled through in the normal way.

NOTE

It is only possible to scroll between random CD tracks on the current disc.

Different messages are displayed depending on which random function has been selected:

- **RANDOM** means that the tracks from only one music CD are played
- **RND ALL** means that all tracks on all music CDs in the optional CD changer are played.
- **RANDOM FOLDER** means that the sound files in a directory on the current CD are played.

CD player
If a normal music CD is being played, activate/deactivate under **Random**.

If a disc with sound files is being played, activate/deactivate under **Random** ➔ **Folder**.

CD changer
If a normal music CD is being played under **Random** ➔ **Single disc** or **Random** ➔ **All discs**. The option **All discs** only applies to the music CDs in the changer.

If a CD with sound files is being played, activate/deactivate instead under **Random** ➔ **Folder**. If you select another CD the function is deactivated.

Disc text
If title information is stored on a music CD it can be shown on the display[5]. Activate/deactivate in CD mode under **CD settings** ➔ **Disc text**.

[5] Only applies to the CD changer.

Radio functions

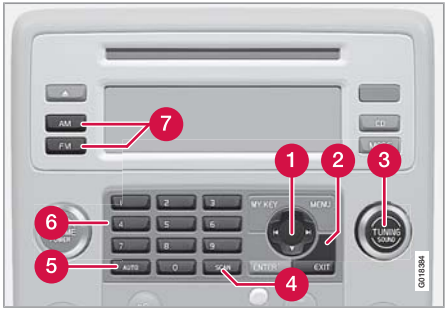

Center console, controls for radio functions

1. Navigation button for automatic tuning
2. Press to cancel a menu selection or a selected function
3. Manual tuning
4. Scan the current wave band
5. Auto store the strongest radio stations in the area in which you are driving
6. Station preset buttons
7. Select wave band AM and FM (FM1 and FM2)

Audio system

Automatic tuning

1. Select a wave band using **FM** or **AM**.
2. Press ▶/|◀ on the navigation button.

Manual tuning

1. Select a wave band using **FM** or **AM**.
2. Turn **TUNING** to select a station.

Preset

Ten station presets can be stored for each wave band. FM has two memories for presets: FM1 and FM2. Only radio stations played through the car's speakers can be stored as presets. The stored presets are selected using the preset buttons.

Preset storage can be carried out manually or automatically.

Manually storing preset stations

1. Tune into a station.
2. Hold in one of the preset buttons until the message Channel stored appears on the display.

Automatically storing preset stations

The function is especially useful in areas where the radio stations and their frequencies are unfamiliar. The ten strongest radio stations are stored automatically in a separate memory.

1. Select a wave band using **FM** or **AM**.
2. Hold in **AUTO** until Autostoring... appears on the display.

Once Autostoring... disappears from the display, the stations are stored. The radio continues in Auto mode and Auto appears on the display. The automatically stored presets can now be selected using the preset buttons. Automatic preset storage can be cancelled using **EXIT**.

Auto mode is cancelled by pressing for example **AUTO** or **FM**.

Returning to Auto mode provides access to the autostored presets:

1. Press **AUTO**.
   > Auto appears on the display.
2. Press a preset button.

Scan

The function automatically searches the current wave band for strong stations. When a station is found, it is played for approx. eight seconds before scanning is resumed. While the station is playing it can be stored as a preset as usual.

1. Select a wave band using **AM** or **FM**.
2. Press **SCAN**.
   > SCAN appears on the display. Close using **SCAN** or **EXIT**.

Radio text

Some stations transmit information on program content, artists, etc. This information can be shown on the display.

Activate/deactivate in FM mode under Radio text.

Sirius satellite radio (option)

Listening to satellite radio

The Sirius satellite system consists of a number of high elevation satellites in geosynchronous orbit.

NOTE

- The digital signals from the Sirius satellites are line-of-sight, which means that physical obstructions such as bridges, tunnels, etc, may temporarily interfere with signal reception.
- Avoid any obstructions, such as metallic objects transported on roof racks or in a ski box, or other antennas that may impede signals from the SIRIUS satellites.

Selecting Sirius radio mode

1. Press **Power** to switch on the audio system (see page 134 and see page 137 for

information on the standard audio and radio functions).

2. Press the **MODE** button repeatedly until Sirius 1 or 2 is displayed.

Activating Sirius radio

1. Tune to a satellite channel that has no audio, which means that the channel is unsubscribed and the text "Call 888-539-SIRIUS TO SUBSCRIBE" is displayed (see also "Selecting a channel".
2. Call Sirius at 1-888-539-SIRIUS (7474).
3. When asked for the Sirius ID number press **AUTO** to display this number. It is also possible to retrieve the Sirius ID from the menu.
4. UPDATING SUBSCRIPTION will be displayed while the subscription is being updated, after which the display will return to the normal view.

SIRIUS ID

The SIRIUS ID is required when contacting the Sirius Call Center. It is used to activate your account and when making any account transactions. The SIRIUS ID is sometimes referred to as the Electronic Serial Number (ESN).

Selecting a channel category

1. Select Sirius radio mode as described above.
2. Press **ENTER**.
3. Use the up/down arrow keys to scroll through the list of categories.
4. Press **ENTER** or the right arrow key to select a category.
   > The first channel in the selected category will then be played.

NOTE

- The category ALL is default, which enables you to scroll through the entire list of available satellite channels.
- The channel categories are automatically updated several times a year. This takes approximately two minutes and will interrupt normal broadcasting. A message will be displayed while updating is in progress. Information on channel or feature updates is available at www.sirius.com.

Selecting a channel

There are three ways of tuning in a channel:

- Using the left and right arrow keys
- By turning the tuning control
- Through direct channel entry.

NOTE

- The numbers of skipped or locked channels will not be displayed.
- If a channel is locked, the access code must be entered before the channel can be selected. See "Unlocking a channel" on page 141.

Direct channel entry

The Sirius satellite channels are in numerical order throughout all of the categories. To access a channel directly:

1. Press **MENU** and scroll to **Direct channel entry**.
2. Use the numerical keypad to enter the channel's number.
3. Press **ENTER**. The radio will tune to this channel, even if it belongs to a category other than the currently selected one.

Scanning

SCAN automatically searches through the list of satellite channels. The search will only be carried out in the selected category, see page 137 for more detailed information.

Audio system

Storing a channel

A total of 20 satellite channels can be stored; 10 channels each for Sirius 1 and 2, see page 138 for detailed information on storing channels.

- A **long** press on one of the number keys stores the currently tuned channel on that key.
- A **short** press on a number key while the radio is in Sirius 1or 2 mode will tune to the preset satellite channel stored on that button, regardless of the currently selected channel category.

Song Seek and Song Memory

The **Song Seek** and **Song Memory** functions provide both audio and visual notification when Sirius is broadcasting your favorite songs. **Song Seek** enables you to store the name of the song for future advance notification when that song is being played. The **Song Memory** feature makes it possible to view all of the current songs that are stored in memory.

Song memory

Up to ten songs can be saved in the system's memory.

1. Press **MENU**.
2. Scroll to **Add song to song mem.** and follow the instructions shown in the display.

If a new song is selected when the memory is full, you will be prompted to press **ENTER** to delete the last song on the list.

NOTE

The remaining songs in the list will move down one position, and the newly added song will be placed at the top of the list.

Song seek

When a satellite radio channel plays one of the songs stored in the song memory, the listener will be alerted by a text message and an audible signal.

Press **ENTER** to listen to the song or **EXIT** to cancel.

To activate/deactivate the song seek function:

1. Press **MENU**
2. Scroll to **Song seek**
3. Press **ENTER** to activate or deactivate the function.

NOTE

When the song has ended, the radio will remain tuned to the channel on which the song was played.

Radio text

The text that is displayed about the song that is currently playing can be changed. Use the **AUTO** button or the menu to display the Artist, Title, Composer, or switch radio text off.

Advanced settings

This menu function enables you to make settings on certain Sirius satellite radio functions. To access this menu:

1. Press **MENU**.
2. Scroll to the Sirius menu.
3. Select **Advanced Sirius settings**.

WARNING

Settings should be made when the vehicle is at a standstill.

The following settings can be made in the Sirius menu:

- The list of saved songs can be displayed
- Channel skip settings can be made
- Channel lock settings can be made
- The channel access code can be displayed or changed
- Your Sirius ID can be displayed

Skip options
This function is used to remove a channel from the list of available channels.

Skipping a channel
1. Select **CHANNEL SKIP LIST** and press **ENTER**.
2. Select a category in the list and press **ENTER**.
3. Skip channels in the list presented by pressing **ENTER** or right arrow key.

Unskip all channels
This permanently removes all channels from the skip list and makes them available for selection.

Temp. unskip all ch.
This function will temporarily unskip all channels and make them available for selection. The channels remain on the skip list and will again be skipped the next time the ignition is switched on.

Channel lock
Access to specific channels can be restricted (locked). A locked channel will not provide audio, song titles, or artist information.

NOTE

All channels are initially unlocked.

Locking a channel:
1. Select **Sirius ID** in the menu and select **LOCK OPTIONS** and press **ENTER**.
2. Select **CHANNEL LOCK LIST** and press **ENTER**
3. Enter the channel access code[6] and press **ENTER**.
4. Select a category in the list and press **ENTER**.
5. Lock channels in the list presented by pressing **ENTER** or right arrow.

The channel is now locked and a checked box will be displayed to indicate this. It will be necessary to enter the channel access code[6] in order to listen to a locked channel.

Unlocking a channel
A channel's access code[6] is required to unlock a channel.

Unlock all channels
This permanently removes all channels from the locked list and makes them available for selection.

Temp. unlock all ch.
This function will temporarily unlock all channels and make them available for selection. The channels remain on the locked list and will again be locked the next time the ignition is switched on.

CHANGE CODE
This function makes it possible to change the channel access code. The default code is 0000.

To change the code:

1. Select **CHANGE CODE** and press **ENTER**.
2. Enter the current code and press **ENTER**.
3. Enter the new code and press **ENTER**.
4. Confirm the new code and press **ENTER**.

If an incorrect code is entered, the text **WRONG CODE!** is displayed.

If you have forgotten the access code:
1. Select **SIRIUS ID** in the Sirius settings menu and press **ENTER**.
2. Press and hold the **ENTER** button for 2 seconds.
3. The current code will be displayed.

[6] The default code is 0000. If you have changed the code and forgotten it, see the section "If you have forgotten the access code."

Audio system

Your Volvo retailer can also provide you with assistance.

SIRIUS ID

This function displays the 12-digit Sirius activation ID.

Introduction

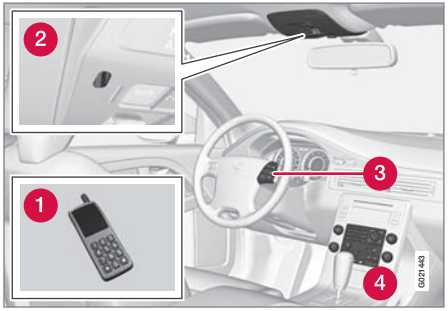

System overview

1. Cell phone
2. Location of the microphone
3. Steering wheel keypad
4. Center console control panel and display

Bluetooth® hands-free

This option makes it possible to set up a wireless connection between a Bluetooth-enabled cell phone and the vehicle's audio system. This enables the audio system to function as a hands-free connection and allows you to remote-control a number of the phone's functions. The microphone used by this system is located in the ceiling console (2). The buttons and other controls on the cell phone can always be used regardless of whether or not the phone is connected to the hands-free system.

NOTE

Not all cell phones are fully compatible with the hands-free system. A list of compatible phones is available at your Volvo retailer or at www.volvocars.us

WARNING

Never use the hands-free feature or any other device in your vehicle in a way that distracts you from the task of driving safely. Distraction can lead to a serious accident.

Bluetooth functions in the center console control panel

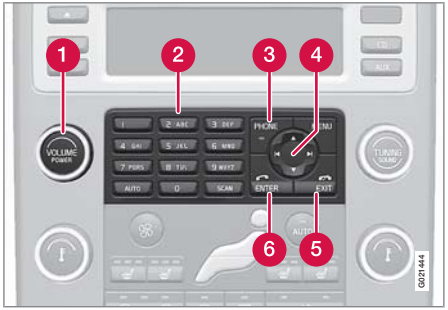

1. **VOLUME** – This function is also available on the steering wheel keypad.
2. Keys containing letters and numbers for dialing numbers, adding phone book entries, etc.
3. **PHONE** – Press to activate/deactivate the Bluetooth® function
4. Navigation buttons
5. **EXIT** – Press to end or defer calls, erase characters that have been entered, end an ongoing function. This function is also available on the steering wheel keypad.
6. **ENTER** – Answer a call. Press once to display the most recently dialed number. This

Bluetooth® hands-free connection

function is also available on the steering wheel keypad.

Getting started

Use the controls on steering wheel keypad (3) and in the center console (4) to access, navigate and make selections in the hands-free system's menus (see page 148).

Activating/deactivating

A short press on the **PHONE** button in the center console activates the hands-free system. The text TELEPHONE will appear at the top of the display to indicate that the audio system is in telephone mode.

The symbol indicates that the hands-free system is active.

A long press on the **PHONE** button deactivates the hands-free system and disconnects the cell phone.

Connecting cell phones

The procedure for connecting a cell phone varies, depending on the phone itself, and on whether or not the phone has been previously connected.

If this is the first time the phone is to be connected to the hands-free system, proceed as follows:

Alternative 1–using the vehicle's menus

1. Activate the cell phone's Bluetooth® function (refer to the phone's owner's manual if necessary) or go to www.volvocars.com
2. Activate the vehicle's Bluetooth® hands-free system by briefly pressing the **PHONE** button.
   > Add phone will be displayed. If one or more cell phones are already registered in the system, they will also be displayed.
3. Select Add phone.
   > The audio system will search for cell phones that are in range. This search takes approximately 30 seconds. Any phones detected will be displayed with their Bluetooth® names. The hands-free system's Bluetooth® name will appear in the cell phone's display as My Car.
4. Select one of the cell phones shown in the audio system's (center console) display.
5. Using the cell phone's keypad, enter the digits shown in the audio system's display.

Alternative 2–using the cell phone's menus

1. Activate the hands-free system by briefly pressing the **PHONE** button in the center console. If there is a cell phone connected, disconnect it from the hands-free system (by pressing **PHONE** in the center console for several seconds).
2. Perform a search using the cell phone's Bluetooth® function (consult the cell phone's owner's manual if necessary).
3. Select My Car in the list of devices shown in the cell phone's display.
4. When prompted, enter the PIN code 1234 in the cell phone.
5. Connect to My Car from the cell phone.

The cell phone will be registered and will be connected automatically to the audio system while the text Synchronising is displayed. For more information on synchronizing a cell phone, see page 146.

When a connection has been established, the symbol and the cell phone's Bluetooth® name will be displayed. The cell phone can now be controlled from the audio system.

Making a call

1. Ensure that TELEPHONE is shown at the top of the center console display and that the symbol is visible (by pressing briefly on **PHONE** on the center console).
2. Dial the desired phone number or use the phone book (see page 146).
3. Press **ENTER.**

End the call by pressing **EXIT.**

Disconnecting the cell phone

The cell phone is automatically disconnected from the audio system if it is moved out of range. For more information about connections, see page 144.

The cell phone can be manually disconnected from the hands-free system by pressing **PHONE**. The hands-free system is also deactivated when the ignition is switched off (or if the driver's door is opened on vehicles equipped with the optional keyless drive).

When the cell phone is disconnected from the hands-free system, a call in progress can be continued using the cell phone's own speaker and microphone.

NOTE

Certain cell phones may require confirmation from the phone's keypad when a call is transferred from hands-free to the cell phone.

Handling calls

Incoming calls

Press **ENTER** to answer a call, even if the audio system is currently in e.g., CD or FM mode. Press **EXIT** to defer a call.

Automatic answer

This function means that incoming calls will be answered automatically. Activate or deactivate the function in the menu system under **Phone settings** ➔ **Call options** ➔ **Automatic answer**.

Call settings

While a call is in progress, press **MENU** or **ENTER** on the center console to access the following functions:

- **Microphone off**–mute the audio system's microphone.
- **Transfer call to mobile**–transfer the call from hands-free to the cell phone.
- **Phone book**–this feature enables you to search for a stored telephone number.

NOTE

- On certain cell phones, the connection is broken when the mute function is used, which is normal. If this happens, the hands-free system will prompt you to reconnect.
- A new call cannot be initiated while another call is in progress.

Sound settings

Call volume

Call volume can be adjusted when the hands-free system is activated. Use the buttons in the steering wheel keypad or the audio system's volume control.

Audio system volume

While a phone call is in progress, volume for the audio system can be adjusted in the normal way with the audio system's volume control. In order to adjust volume during a phone call, the audio system must be switched to one of the other modes (FM, CD, etc).

Audio system sound can be automatically muted when a phone call is received in **Phone settings** ➔ **Sounds and volume** ➔ **Mute radio** and adjust the volume with the ▲ / ▼ keys on the center console.

Bluetooth® hands-free connection

Ringing volume

Go to **Phone settings** ➔ **Sounds and volume** ➔ **Ring volume** and adjust the volume with the ▲ / ▼ keys on the center console.

Ringing tones

The hands-free system's integrated ringing tones can be selected in **Phone settings** ➔ **Sounds and volume** ➔ **Ring signal** ➔ **Ring signal 1,2,3....**

NOTE

The connected cell phone's ring tone is not switched off when one of the hands-free system's ringing tones is used.

If you prefer to use the connected cell phone's ring tone[1], go to **Phone settings** ➔ **Sounds and volume** ➔ **Ring signal** ➔ **Use mobile phone signal**

More information about registering and connecting cell phones

A maximum of 5 cell phones can be registered in the hands-free system. Registration only needs to be done once for each phone. After registration, the cell phone no longer needs to be in sight or searchable. Only one cell phone can be connected to hands-free at a time. Phones can be unregistered in **Bluetooth** ➔ **Remove telephone**

Automatic connection

When the hands-free system is active and the most recently connected cell phone is within range, it is detected automatically. When the audio system searches for the most recently connected phone, this phone's name appears in the display. To manually connect a different cell phone, press **EXIT.**

Manual connection

To connect a phone other than the one that was most recently connected or to switch between cell phones that are already registered in the hands-free system:

1. Put the audio system in telephone mode.
2. Press **PHONE** in the center console and select one of the phones on the list.

A connection can also be established in the menu system under **Bluetooth** ➔ **Connect phone** or **Change phone**.

Phone book

In order to use the hands-free system's phone book (list of contacts), **TELEPHONE** must be displayed at the top of the center console display and the ✱ symbol must be visible.

The audio system stores a copy of the phone book of each registered cell phone. The phone book is automatically copied each time a phone is connected. This function can be activated in **Phone settings** ➔ **Synchronise phone book**. Searches for contacts are only made in the phone book of the currently connected cell phone.

NOTE

If a particular cell phone does not support copying of the phone book, **List is empty** will be displayed when copying has been completed.

If the phone book contains information about someone who is trying to call you, this information will be shown in the display.

[1] Not supported by all cell phones

Searching for contacts

The easiest way to search for a contact in the phone book is to press and hold any of the buttons **2–9** (see the illustration on page 143). This starts a search based on the first letter on the button that has been pressed.

The phone book can also be accessed by pressing the navigation buttons ▼ / ▲ on the center console or by pressing |◀ / ▶| on the steering wheel keypad. A search can also be made in the phone book's search menu in **Phone book ➔ Search**:

1. Enter the first letter of the contact's name and press **ENTER** or simply press **ENTER.**
2. Select the desired contact and press **ENTER** to make a call to that person.

Voice control

If the cell phone that is currently connected allows calls to be made via voice commands, this function can be used by pressing and holding **ENTER.**

Voice mail number

The phone number to your voice mail can be changed in the menu **Phone settings ➔ Call options ➔ Voice mail number**. If no number has been stored, this menu can be accessed by a prolonged press on button **1**. Once a phone number has been stored, press and hold **1** to dial this number.

Call lists

Lists of calls in a particular cell phone are copied to the hands-free system each time that phone is connected. These lists are then updated while the phone is connected. Press **ENTER** to show the most recently dialed numbers. Other call lists can be found under **Call register**.

NOTE

Certain cell phones display the list of the most recently dialed numbers in reverse order.

Entering text

Text is entered by using the number buttons in the center console. Press a button once to enter the first letter on the button, twice to enter the second letter, etc. Continue to press the button to display other characters.

Press **EXIT** briefly to erase a character. Press and hold **EXIT** to erase all of the characters that have been entered. Use the ▲ / ▼ buttons on the center console to navigate among the characters.

Button	Function
1	Space .1-? ! , : " ' ( )
2 ABC	A B C 2 Ä Å À Æ Ç
3 DEF	D E F 3 È É
4 GHI	G H I 4 Ì
5 JKL	J K L 5
6 MNO	M N O 6 Ñ Ö Ò Ø
7 PQRS	P Q R S 7 ß
8 TUV	T U V 8 Ü Ù
9 WXYZ	W X Y Z 9
AUTO *	Press briefly if two characters are to be entered in succession from the same button.
0 +	+ 0 @ * # & $ £ / %
SCAN #	Shift between uppercase and lowercase letters

Bluetooth® hands-free connection

Bluetooth® menus

1. Missed calls

2. Received calls

3 Dialed calls

4. Phone book

- 4.1. Search
- 4.2. Copy fr. mobile phone

5. Bluetooth...

- 5.1. Change phone
- 5.2. Connect phone
- 5.3. Disconnect phone
- 5.4. Connect fr. mobile phone

6. Phone settings

- 6.1. Call options
  - 6.1.2. Automatic answer
  - 6.1.3. Voice mail number
- 6.2. Sounds and volume
- 6.3. IDIS
- 6.4. Synchronize phone book

Introduction

The RSE system can be used at the same time as the vehicle's audio system.

When the rear seat passengers play a DVD, connect an external device to the RSE AUX connectors, etc., and listen to the audio through the cordless headphones, the driver and front seat passenger can still use the vehicle's audio system to listen to the radio, a CD, music stored on an MP3 player, etc.

Please also refer to the Quick Guide provided with the RSE system for additional information.

Electrical current - ignition key

The RSE system can be activated with the ignition in mode **I** or **II**. or when the engine is running. While the engine is being started, a film or music that is currently being played will pause momentarily and resume playing when the engine has started.

When the RSE system has been used once when the ignition is switched off, it will be then be blocked for further use. RSE can be restarted by putting the ignition in mode **I**.

NOTE

Using RSE for more than approximately 10 minutes with the engine switched off may drain the vehicle's battery and make it difficult or impossible to start the engine.

If this occurs, a message will be displayed on the RSE system's screens.

Music

Listening to a music CD

1. Open the cover on the armrest between the front seats and insert a CD into the RSE player's slot with the disc's label facing forward (away from the buttons).
   > The CD will begin to play automatically.
2. Switch on the cordless headphones and select **CH A** for the left screen or **CH B** for the right screen.
   > This will direct the sound to the headphones.
3. Adjust the headphone volume by using the thumb wheel on the headphones.

   To listen through the vehicle's audio system speakers, press **MODE** on the audio system control panel and select **AUX**.

   Press [A|B] on the RSE remote to route the sound through the speakers.

Selecting a folder on the CD

1. Insert the CD in the player.
2. Press [▶II].
3. Use the navigation buttons (the arrow keys surrounding the OK button on the RSE remote control) to highlight a folder and/or a specific track.
4. Press [OK] to select a sub-folder.

Playback alternatives

The CD can be played in several different ways. Use the navigation buttons to select one of the alternatives.

With the dialogue box displayed:

1. Press the right navigation button to access the menu to the right..
2. Use the navigation keys to select one of the alternatives.
3. Confirm your choice by pressing [OK].

Changing tracks on the CD

– Change tracks on the CD by pressing [▶▶|] or [|◀◀]. Hold the respective buttons down for fast forward or reverse.

Rear Seat Entertainment - Dual Screen (RSE)–option

Pause

1. Pause and restart the CD by pressing ▶II.
2. Stop the CD by pressing ■/⏏.
3. Press ■/⏏ again to eject the CD.

Home-burned CDs

CDs burned on a home computer can be played. However, the quality of the sound may be affected by the type of source file and format used, and by the condition of the disc.

RSE-AUX connectors and 12-volt socket

The three color-coded (yellow-white-red) RSE-AUX connectors can be used to connect an auxiliary device to the RSE system. Always follow the connection instructions provided with the auxiliary device. Devices connected to RSE-AUX can use the RSE screens, cordless headphones, the headphone sockets or the vehicle's audio system speakers.

Connecting a device to RSE-AUX

RSE-AUX connectors are located under the cover over the armrest between the front seats

1. Connect the video cable from the auxiliary device to the yellow connector.
2. Connect the left audio cable to the white connector and the right cable to the red connector.
3. Connect the power cable to the 12-volt socket (if the device is designed for 12-volt current).

For the location of the 12-volt sockets, see page 190.

System

The formats supported by the system are:

Audio format	CD-DA, DVD Audio Playback, MP3, WMA
Video format	DVD video, VCD, SVCD, Divx/ MPEG-4, WMA video, Photo cd Kodak, Photo CD JPG
Disc format	DVD-RAM, DVD-ROM, DVD-RW, DVD+RW, DVD-R, DVD+R, CD-R, CD-ROM, CD-RW, CD-3, HDCD

Advanced system settings

These settings can only be made when there is no disc in the CD/DVD player.

– Press **MEDIA MENU**.

GENERAL SETUP	ANGLE MARK CAPTION
AUDIO SETUP	COMPRESSION
DVX(R) REGISTRATION	
PREFERENCES	TV TYPE AUDIO SUBTITLE DEFAULTS

Replacing batteries in the remote control and cordless headphones

The remote control and headphones each run on 2 AAA batteries.

1. Remove the retaining screw and lift off the battery cover.
2. Remove the old batteries and insert new ones as indicated by the symbols in the battery compartment.
3. Replace the battery cover and tighten the retaining screw.

1. Remove the retaining screw and lift off the battery cover.
2. Remove the old batteries and insert new ones as indicated by the symbols in the battery compartment.
3. Replace the battery cover and tighten the retaining screw.

NOTE

If the temperature in the passenger compartment is high (e.g., if the car has been parked in the sun for a prolonged period) or if the batteries in the remote or headphones are weak, a message will appear on the RSE screens.

Concern for the environment

Used batteries should be disposed of properly (e.g., at a recycling facility, etc).

Trip computer

Introduction

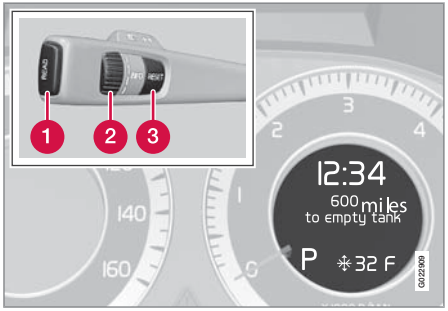

Information display and controls

1. **READ**–press to acknowledge/confirm/erase a message)
2. Thumb wheel (used to scroll among the trip computer menus)
3. **RESET**–resets certain functions

To scroll through trip computer information, move the thumb wheel up or down. Continue turning to return to the starting point.

Functions

NOTE

If a warning message appears while you are using the trip computer, this message must be acknowledged in order to return to the trip computer function. Acknowledge a message by pressing **READ**.

To change the unit of measure specified for distance and speed, contact an authorized Volvo workshop.

Average speed

The system calculates the average speed from the last resetting. Reset using **RESET**.

Current speed in mph (Canadian models only)

This function provides the driver with an instantaneous conversion of the car's current speed from km/h to mph.

Current speed in km/h (U.S. models only)

This function provides the driver with an instantaneous conversion of the car's current speed from mph to km/h.

Current fuel consumption (Instantaneous)

Current fuel consumption is calculated every second. The information on the display is updated every few seconds. When the vehicle is stationary, "----" appears on the display.

Average fuel consumption

The average fuel consumption since the last reset. Reset using **RESET**.

Driving distance on current fuel reserve

This function shows the approximate distance that can be driven on the fuel remaining in the tank. The calculation is based on average fuel consumption during the last 20 miles (30 km) of driving and the amount of fuel remaining in the tank when the reading was taken. When the message **---- miles to empty tank** appears in the display, refuel as soon as possible.

NOTE

The actual distance that can be driven on the usable fuel remaining in the tank may be influenced by a change in driving style.

Resetting

1. Select **Average speed** or **Average fuel consumption**.
2. Press and hold **RESET** for approx. 1 second to reset the selected function. If **RESET** is kept depressed for at 3 three seconds, Average speed and Average fuel consumption are reset simultaneously.

Compass

Operation

Rearview mirror with compass.

The rearview mirror has an integrated display that shows the compass direction in which the vehicle is pointing. Eight different directions are shown with the abbreviations: **N** (north), **NE** (north east), **E** (east), **SE** (southeast), **S** (south), **SW** (southwest), **W** (west) and **NW** (northwest).

The compass is displayed automatically when the vehicle is started or in ignition mode **II**. To switch the compass on/off use a pen or similar object and press in the button on the rear side of the mirror.

Calibration

Calibrating the compass.

The compass may need to be calibrated if, for example, the vehicle is driven into a new magnetic zone. The character **C** is shown in the mirror's display if calibration is necessary.

1. Stop the vehicle in a large open area, safely out of traffic and away from steel structures and high-tension electrical wires.
2. Start the vehicle.

NOTE

For best results from calibration, switch off all electrical equipment in the vehicle (climate system, windshield wipers, audio system, etc.) and make sure that all doors are closed.

3. Using a pen or similar object, press and hold the button on the rear side of mirror until **C** is shown again in the mirror(after approx. 6 seconds).
4. Drive as usual. **C** disappears from the display when calibration is complete.

   Alternative calibration method:

   Drive slowly in a circle at a speed of no more than 5 mph (8 km/h) until **C** disappears from the display when calibration is complete.

Selecting a magnetic zone

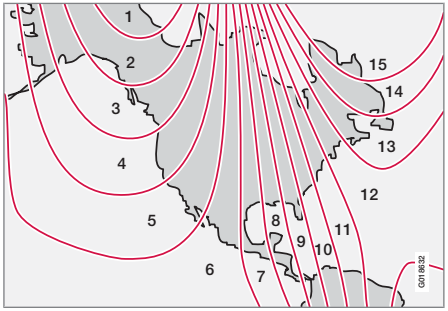

Magnetic zones.

The earth is divided into 15 magnetic zones. The correct zone must be selected for the compass to work correctly.

Compass

1. Put the ignition in mode **II**.
2. Using a pen or similar object, press and hold the button on the rear side of mirror for at least 3 seconds. The number for the current area will be shown.
3. Press the button repeatedly until the number for the required geographic area (1 – 15) is shown.
4. The display will revert to showing the compass direction after several seconds.

Introduction

The Dynamic Stability and Traction Control system (DSTC) consists of a number of functions designed help reduce wheel spin, counteract skidding, and to generally help improve directional stability.

CAUTION

A pulsating sound will be audible when the system is actively operating and is normal.

Traction control (TC)

This function is designed to help reduce wheel spin by transferring power from a drive wheel that begins to lose traction to the wheel on the opposite side of the vehicle (on the same axle).

TC is most active at low speeds.

This is one of DSTC's permanent functions and cannot be switched off.

Active Yaw Control (AYC)

This function helps maintain directional stability, for example when cornering, by braking one or more of the wheels if the vehicle shows a tendency to skid or slide laterally.

This is one of DSTC's permanent functions and cannot be switched off.

Spin control (SC)

The spin control function is designed to help prevent the drive wheels from spinning while the vehicle is accelerating.

Under certain circumstances, such as when driving with snow chains, or driving in deep snow or loose sand, it may be advisable to temporarily switch off this function for maximum tractive force.

WARNING

The car's handling and stability characteristics will be altered if the spin control function has been disabled.

Operation

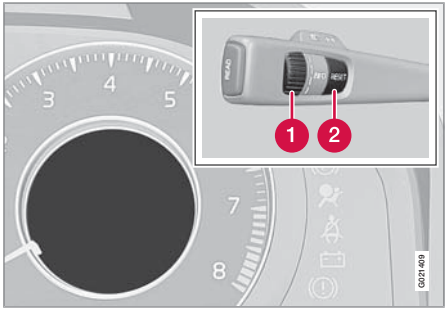

Temporarily switching off Spin control

1. Turn the thumbwheel 1 until the DSTC menu is shown.
2. Hold down the **RESET** button 2 to toggle between DSTC SPIN CONTROL ON or OFF.

Messages in the information display

DSTC Temporarily OFF – system function has been temporarily reduced due to high brake disc temperature. The function is activated automatically when the brakes have cooled.

DSTC Service required – the system has been disabled due to a fault. If this occurs:

1. Stop the vehicle in a safe place and turn off the engine.
2. Restart the engine.

If the message remains when the engine is restarted, drive to an authorized Volvo workshop to have the system inspected.

Symbols in the instrument panel

If the symbols and are displayed at the same time, read the message in the information display.

Stability system

If the symbol appears alone, it may appear as follows:

- If the symbol flashes, this indicates that the stability system is actively functioning to help counteract wheel spin and/or a skid.
- If the symbol remains on for approximately 2 seconds after the engine has been started, this indicates that the system is performing a self-diagnostic test.

WARNING

The stability system is intended to help improve driving safety. It supplements, but can never replace, the driver's judgment and responsibility when operating the vehicle. Speed and driving style should always be adapted to traffic and road conditions.

Active chassis (Four C)–option

Active chassis, Four-C (Continuously Controlled Chassis Concept), regulates the characteristics of the shock absorbers so that the car's driving characteristics can be adjusted. There are three settings: Comfort, Sport and Advanced.

Comfort

Comfort mode offers a somewhat softer ride and the transmission shifts gears at lower rpm. This mode is particularly suitable for long-distance highway driving. The indicator light in the button will be on when this mode is selected.

Sport

In this mode, the vehicle's body sway is reduced during cornering and steering response is more immediate. The transmission shifts up at higher rpm for sportier driving. The indicator light in the button will be on to indicate that Sport mode has been selected.

Advanced

In this mode, body sway in curves is minimal and steering response is very direct. Gear shifting is done at high rpm in each gear for dynamic and active driving.

Operation

Chassis settings

Use the buttons in the center console to change setting. The setting in use when the engine is switched off is activated the next time the engine is started.

Speed-dependent steering force (option)

Steering force increases with the speed of the vehicle to give the driver enhanced sensitivity. At low speed the vehicle is easy to steer in order to facilitate parking, etc.

Steering force can be changed under **Car settings ➔ Steering force level**. For a description of the menu system, see page 120.

NOTE

This steering force level menu function cannot be accessed when the vehicle is in motion.

Cruise control

Operation

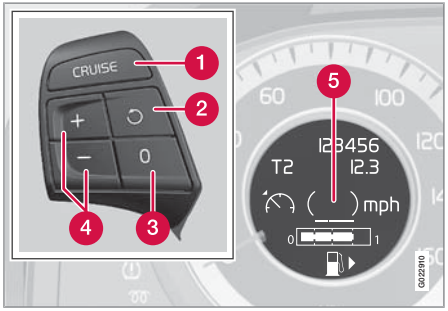

Steering wheel-mounted controls and display

1. Standby mode
2. Resume set speed
3. Deactivating
4. Activate/set speed
5. Set speed indicator (parentheses indicate standby mode)

Engaging the cruise control function

Before a speed can be set, the cruise control system must be engaged (put in standby mode).

– Press the **CRUISE** button (1).

> The symbol illuminates and the text **(---) mph** (5) indicates that cruise control is in standby mode.

NOTE

This does not set the vehicle's speed.

Setting a speed

Use the + or – buttons set the vehicle's current speed. The set speed is shown in the display.

NOTE

Cruise control cannot be engaged at speeds below 20 mph (30 km/h).

Adjusting the set speed

After a speed has been set, it can be increased or decreased by using the + or – buttons.

1. Press and hold down + or – until the vehicle reaches the desired speed.
   > This will become the set speed when the button is released.
2. Press + or – for approximately a half second and release the button to increase or decrease vehicle speed by approximately 1 mph (1.6 km/h).

NOTE

- A temporary increase in speed by pressing the accelerator pedal, for less than 1 minute (e.g. when passing another car), does not affect the current cruise control setting. The vehicle will automatically return to the previously set speed when the accelerator pedal is released.
- If one of the cruise control buttons is kept depressed for more than approx. 1 minute cruise control is disengaged. The engine must then be switched off in order to reset cruise control.

Automatic deactivation

Cruise control is automatically deactivated **temporarily** if one of the following occurs:

- If the speed drops below approximately 20 mph (30 km/h).
- When the brake pedal is depressed.
- If the gear selector is moved to position N.
- During wheel spin or wheel lock-up.
- If the vehicle's speed is increased by using the accelerator pedal for more than 1 minute.

The currently set speed will be saved in the system's memory.

Temporary deactivation

The driver can temporarily deactivate cruise control by pressing **0**. The saved speed is shown in brackets in the information display.

Resume set speed

If cruise control has been deactivated temporarily, it can be reactivated by pressing ↺. The vehicle's speed returns to the most recently set speed.

WARNING

There may be a significant increase in speed after the ↺ button has been pressed.

Deactivation

Cruise control is disengaged with **CRUISE,** by putting the gear selector in Neutral, or by switching off the engine. The set speed is cleared.

WARNING

Cruise control should not be used in heavy traffic or when driving on wet or slippery roads. Cruise control may not maintain set speed on steep downgrades.

Collision warning with Auto-brake (option)

Introduction

Collision Warning with Auto-brake is designed to assist the driver if there is a risk of a collision with the vehicle ahead, if that vehicle is at a standstill or moving in the same direction as your vehicle. Auto-brake helps reduce the collision speed.

Collision Warning consists of the following three functions:

1. Collision warning
The driver is warned of the imminent risk of a collision.

2. Brake support
This helps the driver brake efficiently in a critical situation.

3. Auto-brake
This function brakes the vehicle automatically if a collision cannot be avoided.

WARNING

The auto-brake function connot prevent a collision but instead is intended to reduce speed at the moment of impact. For full braking effect, driver must apply the brakes.

WARNING

- The collision warning system does not work in all driving situations, and traffic, weather and road conditions.
- The collision warning system is not designed to detect pedestrians.
- Warnings are only provided when the risk of collision is high. The Function section provides information about limitations that the driver must be aware of before use.
- Never wait for a collision warning. This system is designed to be a supplementary driving aid. It is not, however, intended to replace the driver's attention and judgement. The driver is responsible for maintaining a safe distance and speed, even when the collision warning system is in use.
- Maintenance of the collision warning system components must only be performed by a trained and qualified Volvo technician.

Function

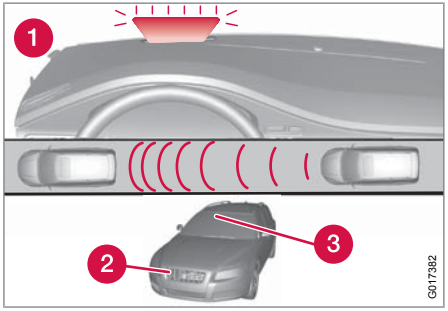

Function overview

1. Visual warning signal, collision risk
2. Radar sensor
3. Camera

Collision warning
The radar sensor and the camera work together to detect stationary vehicles and vehicles that are moving in the same direction as your vehicle. If there is a risk of collision, the driver is alerted by a flashing red warning light and an audible warning signal. Collision warning is active at speeds above 5 mph (7 km/h).

Brake support
If the risk of collision continues to increase after the collision warning has been given, brake

support is activated. Brake support prepares the brake system to react quickly, and the brakes are applied slightly. This may be experienced as a light tug.

If the brakes are applied quickly, full braking effect will be provided, even if pressure on the brake pedal is light.

Auto-brake

If a collision is imminent and the driver has not applied the brakes, the auto-brake function is activated without the driver pressing the brake pedal. Limited brake force is applied to reduce the vehicle's speed when the collision occurs.

WARNING

The auto-brake function connot prevent a collision but instead is intended to reduce speed at the moment of impact. For full braking effect, driver must apply the brakes.

NOTE

The auto-brake function is always on and cannot be turned off.

Operation

Some settings are controlled from the center console via a menu system. For information on how the menu system is used, see page 120.

On and off

To switch Collision Warning on or off, go into the menu **Car settings ➔ Collision warning settings** and select On or Off. When the engine is started, the setting that was selected when it was switched off will be used.

Activating/deactivating warning signals

The collision warning system's audible and visual signals are activated automatically when the engine is started if the collision warning system is activated.

The audible warning signal can be activated/deactivated by selecting the alternative **On** or **Off** in **Car settings ➔ Collision warning settings ➔ Warning sound**.

Setting a warning distance

This setting determines the distance at which the visual and audible warnings are triggered. Select **Long, Normal** or **Short** under **Car settings Collision warning settings ➔ Warning distance**

The warning distance determines the level of sensitivity used by the system. The warning distance **Long** provides an earlier warning. Begin by using Long and if the system gives too many warnings, try changing to **Normal.**

WARNING

- The setting **Short** should only be used in situations where traffic is light and moving at low speeds.
- Collision Warning alerts the driver to the risk of a collision but this function cannot reduce the driver's reaction time.
- For Collision Warning to be as effective as possible, it is recommended that Distance Alert be set to 4 or 5, see page 173.

NOTE

- When adaptive cruise control is used, the warning light and signal will be used by cruise control, even if they have been deactivated by the driver.
- In situations where traffic is moving at considerably different speeds, or if the vehicle ahead brakes suddenly, warnings may be considered to be late, even if the setting **Long** has been selected.

Checking settings

The current Collision Warning settings can be checked by going into the menu system at **Car settings ➔ Collision warning settings**. See page 120 for more information on the menu system.

Collision warning with Auto-brake (option)

Limitations

Strong sunlight, reflections, extreme light contrasts, the use of sunglasses, or if the driver is not looking straight ahead may make the visual warning signal in the windshield difficult to see. For this reason, always activate the audible warning signal in such conditions.

NOTE

The visual warning signal may be temporarily disengaged in the event of high passenger compartment temperature due to strong sunlight, etc. If this occurs, the audible warning signal will be used, even if it has been deactivated in the menu system.

Warnings may not appear if the distance to the vehicle ahead is very small or if steering wheel and pedal movements are great, for example, due to a very active driving style.

WARNING

- In certain situations, the system cannot provide warnings or warning may be delayed if traffic conditions or other external factors make it impossible for the radar sensor or camera to detect the vehicle ahead.
- Warnings may not be provided if the distance to the vehicle ahead is short, or if movements of the steering wheel/brake pedal are great, such as during active driving.
- The sensor system has a limited range for stationary or slow-moving vehicles and may therefore give delayed or no warnings if your vehicle's speed is above approximately 45 mph (70 km/h).
- Warnings for stationary or slow-moving vehicles may not be provided in dark conditions.

The Collision Warning system uses the same radar sensors as Adaptive Cruise Control. For more information on the radar sensor and its limitations, see page 169.

If no warning is given, or if a warning is delayed, Auto-brake will also not be provided or will be delayed.

NOTE

If warnings are given too frequently, the warning distance can be reduced (see page 161. This causes the system to provide later warnings, which decreases the total number of warnings provided.

The camera's limitations

The camera is used by Collision Warning with Auto-brake, Driver Alert Control (see page 176), and Lane Departure Warning (see page 178).

NOTE

- To help protect the camera in very hot conditions, it may be temporarily switched off for approximately 15 minutes after the engine has been started.
- Keep the section of the windshield in front of the camera clean and free of ice, snow, or condensation.

WARNING

- The camera has the same limitations as the human eye. In other words, its “vision is impaired” by adverse weather conditions such as heavy snowfall, dense fog, etc. These conditions may reduce the function of systems that depend on the camera or cause these systems to temporarily stop functioning.
- Never place any objects, decals, etc., on the windshield in front of the camera. This could reduce or block the camera’s function, and could cause one or more of the systems that utilize the camera to stop functioning.
- Strong sunlight, reflections from the road surface, ice or snow covering the road, a dirty road surface, or unclear lane marker lines may drastically reduce the camera’s capacity to detect the side of a lane or another vehicle.

Fault tracing and actions

If the message **Windshield sensors blocked** is displayed, this means that the camera is obscured and cannot detect vehicle or road marker lines in front of the vehicle.

This, in turn, means that Collision Warning with Auto-brake, Lane Departure Warning, and Driver Alert Control will not have full functionality.

The table lists possible causes for this message being displayed, and suitable actions.

Cause	Action
The surface of the windshield in front of the camera is dirty or covered with ice or snow.	Clean or clear the section of the windshield in front of the camera.
Fog, heavy rain or snow is interfering with the function of the camera.	No action possible. Heavy precipitation may affect the function of the camera.

Collision warning with Auto-brake (option)

Cause	Action
The surface of the windshield is clean but the message remains in the display.	Wait a short time. It may take several minutes for the camera to register visibility.
The surface between the inside of the windshield and the camera is dirty.	Contact an authorized Volvo retailer or service technician to have this surface cleaned.

Symbols and messages in the display

Symbol	Message	Description
	Collision warn. OFF	Collision Warning is switched off. This message is displayed when the engine is started and will disappear after approx. 5 seconds. It can also be erased by pressing the READ button.
	Collision warn. Unavailable	Collision Warning cannot be activated. This message is displayed when the driver attempts to activate the function. It will disappear after approx. 5 seconds or can be erased by pressing the READ button.
	Auto braking was activated	Auto-braking has been active.
	Camera blocked See manual	The camera is temporarily not functioning. This message is displayed if the camera is obstructed by snow, ice, dirt, etc., on the windshield. Clean the area of the windshield in front of the camera, see page 162 for more information on the camera's limitations.

Collision warning with Auto-brake (option)

Symbol	Message	Description
	Radar blocked See manual	Collision Warning and Auto-brake are temporarily not functioning. The radar sensor is blocked, for example by heavy rain or snow that has accumulated in front of the sensor, and cannot detect other vehicles, see page 169 for more information on the radar sensor's limitations.
	Collision warn. Service required	Collision Warning and Auto-brake are partially or completely not functioning. Contact a trained and qualified Volvo service technician if the message remains in the display.

Adaptive Cruise Control–ACC (option)

Introduction

Adaptive Cruise Control (ACC) is an optional system designed to assist the driver by maintaining a set speed or a set distance to the vehicle ahead. It is primarily intended for use on long straight roads in steady traffic, such as on highways and other main roads.

WARNING

- Do not use the adaptive cruise control system in demanding driving conditions such as city traffic, winding roads, at intersections, on slippery surfaces, in poor visibility, heavy rain, etc.
- Maintenance of cruise control components must only be performed by an authorized Volvo workshop.

WARNING

- Adaptive cruise control cannot cover all driving situations and traffic, weather and road conditions. The Function section provides information about limitations that the driver must be aware of before using the adaptive cruise control.
- This system is designed to be a supplementary driving aid. It is not, however, intended to replace the driver's attention and judgement. The driver is responsible for maintaining a safe distance and speed and must intervene if adaptive cruise control does not maintain a suitable speed or suitable distance.

Function

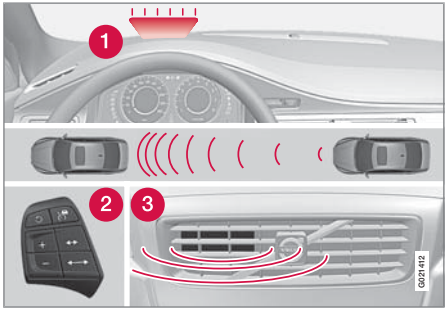

Function overview

1. Warning light, braking by driver required
2. Controls
3. Radar sensor in front grille

Adaptive cruise control consists of:

- A cruise control system to maintain a set speed
- A system to maintain a set distance to the vehicle ahead (expressed as a time interval. For example, you can choose to remain approximately 2 seconds behind the vehicle ahead).

WARNING

- Adaptive cruise control is not a collision avoidance system. The driver is always responsible for applying the brakes if the system does not detect another vehicle.
- Adaptive cruise control does not react to slow moving or stationary vehicles.

The distance to the vehicle ahead (in the same lane) is measured by a radar sensor. Your vehicle's speed is regulated by acceleration and braking. The brakes may emit a sound when they are being modulated by the adaptive cruise control system. This is normal.

WARNING

The brake pedal moves when the adaptive cruise control system modulates the brakes. Do not rest your foot under the brake pedal.

The adaptive cruise control system is designed to follow the vehicle ahead of you in the same lane, at a set time interval.

If the radar sensor has not detected a vehicle ahead, the system will then attempt to maintain the set speed. This is also the case if the speed of the vehicle ahead exceeds the speed that you have set.

The adaptive cruise control system is designed to smoothly regulate speed. However, the driver must apply the brakes in situations that require immediate braking. This applies when there are great differences in speed between vehicles, or if the vehicle ahead brakes suddenly.

WARNING

Due to limitations in the radar sensor, braking may occur unexpectedly or not at all, see page 169.

Adaptive cruise control can only be activated at speeds above 20mph (30 km/h). If speed falls below 20 mph (30 km/h) or if engine speed (rpm) becomes too low, adaptive cruise control disengages and will no longer modulate the brakes. In situations when adaptive cruise control cannot be activated **Cruise Control Unavailable** is shown in the display, see page 171.

WARNING

When adaptive cruise control disengages, the brakes will not be modulated automatically. The driver must assume full control over the vehicle.

Warning light-driver braking required

Adaptive cruise control has a braking capacity that is equivalent to approximately 30% of the vehicle's total braking capacity. In situations requiring more brake force than ACC can provide, if the driver does not apply the brakes, an audible signal will sound and a red warning light will illuminate in the windshield to alert the driver to react.

NOTE

Strong sunlight, reflections, extreme light contrasts, the use of sunglasses, or if the driver is not looking straight ahead may make the visual warning signal in the windshield difficult to see.

WARNING

Cruise control only warns of vehicles detected by the radar sensor, see page 169. In some cases there may be no warning or the warning may be delayed. The driver should always apply the brakes when necessary.

Adaptive Cruise Control–ACC (option)

Operation

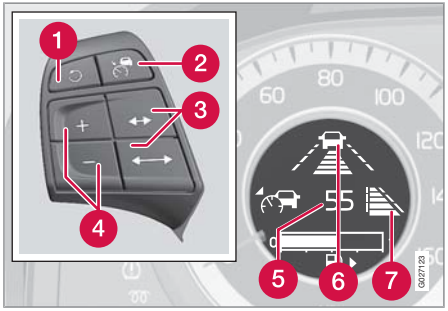

Controls and display

1. Activate and resume settings, increase speed
2. Standby mode, on/off
3. Set time interval
4. Activate and set a speed
5. Set speed (parentheses indicate standby mode)
6. Time interval while it is being set
7. Time interval after it has been set

Engaging the cruise control function

Before ACC can be used, it must first be put in standby mode. To do so, press . The symbol illuminates in the display and (---) indicate that ACC is in standby mode.

Setting a speed

Use the + or − buttons to store (set) the vehicle's current speed. The set speed, for example 55 mph, is shown in the display.

NOTE

Adaptive cruise control cannot be engaged at speeds below 20 mph (30 km/h).

The “car” symbol illuminates on the left side of the display when the radar sensor detects another vehicle ahead. The distance to a vehicle ahead is only regulated when this symbol is illuminated.

Adjusting the set speed

After a speed has been set, it can be increased or decreased by using the + or − buttons.

When the system is in active mode, the button has the same function as +, but results in a smaller increase in speed.

NOTE

- If one of the adaptive cruise control buttons is pressed for more than approximately one minute, ACC will be deactivated. The engine must then be switched off and restarted to reset ACC.
- In some situations cruise control cannot be activated. **Cruise Control Unavailable** is shown in the display, see page 171.

Setting a time interval

The set time interval to vehicles ahead is increased with and decreased with 3. The current time interval is shown briefly in the display following adjustment.

Five different time intervals can be selected and are shown in the display as 1–5 horizontal bars. The greater the number of bars, the longer the time interval. At low speeds, when the distance to the vehicle ahead is short, ACC increases the time interval slightly. In order to follow the vehicle ahead as smoothly as possible, ACC allows the time interval to vary considerably in certain situations.

WARNING

- Only use a time interval that is suitable in current traffic conditions.
- A short time interval gives the driver limited reaction time if an unexpected situation occurs in traffic.

The number of bars indicating the selected time interval are shown while the setting is being made and for several seconds afterward. A smaller version of the symbol is then shown to the right in the display. The same symbol is also displayed when Distance Alert is activated, see page 173 .

Deactivating and resuming settings

Cruise control is deactivated, either with a short press on 2, or by action taken by the driver, such as braking, etc. The set speed, for example 55 mph, is then shown in parentheses. Speed and time interval are resumed by pressing .

WARNING

There may be a significant increase in speed after the button has been pressed.

A short press on in standby mode or a long press in active mode deactivates cruise control. The set speed is then cleared and cannot be resumed.

When ACC is activated, the vehicle's speed increases by approximately 1 mph (1 km/h) each additional time is pressed.

Deactivation due to action by the driver

ACC is deactivated:

- when the brakes are applied
- if the gear selector is moved to **N**
- if the accelerator pedal is depressed for an extended period.

NOTE

If the accelerator pedal is only depressed for a short time, such as when passing another vehicle, ACC is deactivated temporarily and is reactivated when the pedal is released.

Automatic deactivation

Adaptive cruise control is linked to other systems such as ABS, the stability and traction control system (DSTC), and the Distance Alert System. If any of these systems are not functioning properly, adaptive cruise control is automatically deactivated.

In the event of automatic deactivation a signal will sound and the message **Cruise Control Canceled** is shown in the display. The driver must then intervene and adapt the vehicle's speed to the surrounding traffic.

Automatic deactivation may be caused if:

- the vehicle's speed falls below 20 mph (30 km/h)
- the wheels lose traction or if the anti-lock brake system (ABS) is activated
- brake temperature is high
- engine speed (rpm) is too low
- the radar sensor is obstructed by, for example, wet snow or rain.

The radar sensor and its limitations

The radar sensor is used by both Adaptive Cruise Control and the Collision Warning System with Auto-brake. It is designed to detect cars or larger vehicles driving in the same direction as your vehicle.

WARNING

Accessories or other objects, such as extra headlights, must not be installed in front of the grille.

Modification of the radar sensor could make its use illegal.

The radar sensor's capacity to detect vehicles ahead is impeded:

Adaptive Cruise Control–ACC (option)

- if the radar sensor is obstructed and cannot detect other vehicles, for example in heavy rain, or if snow or other objects are obscuring the radar sensor.

NOTE

Keep the area in front of the radar sensor clean.

- if the speed of vehicles ahead is significantly different from your own speed.

WARNING

The radar sensor has a limited field of vision. In some situations it may detect a vehicle later than expected or not detect vehicles at all.

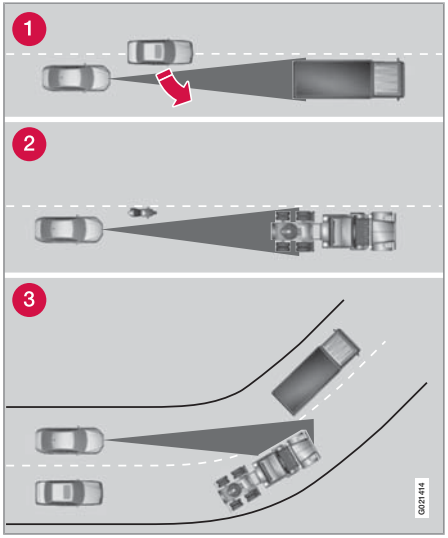

Radar sensor field of vision (gray)

1. In certain situations, the radar sensor cannot detect vehicles at close quarters, for example a vehicle that suddenly enters the lanes between your vehicle and the one that the system has already detected.
2. Small vehicles, such as motorcycles, or vehicles not driving in the center of the lane may remain undetected.
3. In curves, the radar sensor may detect the wrong vehicle or lose a detected vehicle from view.

Fault tracing and actions

If the message **Radar blocked See manual** is displayed, this means that the radar signals from the sensor have been obstructed and that a vehicle ahead cannot be detected.

This, in turn, means that the functions of the ACC, Distance Alert, and Collision Warning System with Auto-brake will not function.

The table lists possible causes for this message being displayed, and suitable actions.

Cause	Action
The surface of the radar in the grille is dirty or obstructed in some way.	Clean the radar surface, or remove the object causing the obstruction.
Heavy rain or snow is interfering with the radar signals.	No action possible. Heavy precipitation may affect the function of the radar.

Cause	Action
Swirling water or snow from the surface of the road may interfere with the radar signals.	No action possible. A very wet or snow-covered road surface may affect the function of the radar.
The surface of the radar is clean but the message remains in the display.	Wait a short time. It may take several minutes for the radar to detect that it is no longer obstructed.

Symbols and messages in the display

Symbol	Message	Description
		Standby mode or active mode when no other vehicle has been detected.
		Active mode with a detected vehicle to which ACC is adapting speed/distance.
		Time interval while it is being set.
		Time interval after it has been set.
	Turn on DSTC to enable Cruise	ACC cannot be activated until the stability system (DSTC) has been activated. see page 155 for more information on DSTC.
	Cruise control canceled	ACC has been automatically switched off. The driver must regulate the vehicle's speed/distance to the vehicle ahead.
	Cruise control unavailable	ACC cannot be activated. This may be due to: • high brake temperature • the radar sensor is obstructed (by heavy rain, snow, etc.)

Adaptive Cruise Control–ACC (option)

Symbol	Message	Description
	Radar blocked See manual	ACC has been temporarily disconnected because the radar is obstructed in some way and cannot detect other vehicles. see page 169 for information on the radar sensor's limitations..
	Cruise control Service required	ACC is not functioning. Contact a trained and qualified Volvo service technician.

Introduction

Distance Alert is part of Adaptive Cruise Control and is a function that provides information about the time interval to the vehicle ahead.

Time interval information is only given for a vehicle that is driving ahead of your vehicle, in the same lane, and in the same direction. No information is provided for vehicles driving toward you, moving very slowly, or at a standstill.

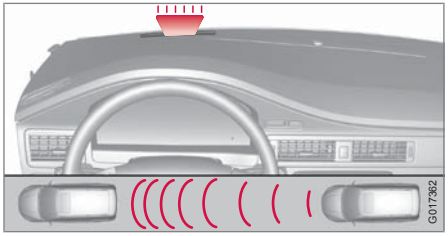

A smaller section of the red warning light in the windshield glows steadily if your vehicle is closer to the vehicle ahead than the set time interval.

NOTE

Distance Alert is in active mode while Adaptive Cruise Control is active.

Distance Alert is active at speeds above approximately 20 mph (30 km/h).

WARNING

Distance Alert only indicates the distance to the vehicle ahead. It does not affect the speed of your vehicle.

Operation

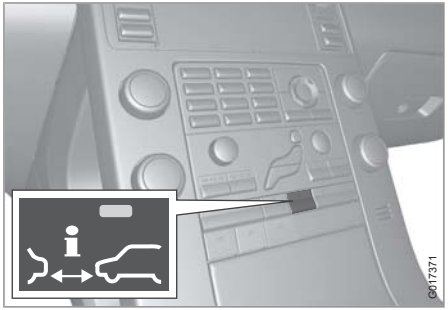

– Press the button in the center instrument panel to switch this function on or off.
  > The indicator light in the button illuminates when the function is on.

Setting a time interval

The buttons for setting a time interval are located on the left side of the steering wheel, see the illustration on page 168 .

– Press ⟷ to increase the interval or ↔ to decrease it.

Five different time intervals can be selected and are shown in the display as 1–5 horizontal bars. The greater the number of bars, the longer the time interval.

No. of bars	Approx. time interval (in seconds)
1	1.0
2	1.4
3	1.8
4	2.2
5	2.6

The number of bars indicating the selected time interval are shown while the setting is being made and for several seconds afterward. A smaller version of the symbol is then shown to the right in the display. The same symbol is

Distance alert

also displayed when Adaptive Cruise Control is activated.

NOTE

- The higher your vehicle's speed, the greater the distance to the vehicle ahead, measured in feet (meters), for a given time interval.
- The set time interval is also used by Adaptive Cruise Control, see page 168.

WARNING

Only use a time interval that is suitable in current traffic conditions.

Limitations

The Distance Alert function uses the same radar sensor used by Adaptive Cruise Control and the Collision Warning system. See page 169 for more information on the radar sensor's limitations.

NOTE

Strong sunlight, reflections, extreme light contrasts, the use of sunglasses, or if the driver is not looking straight ahead may make the visual warning signal in the wind-shield difficult to see.

WARNING

- Bad weather or winding roads may affect the radar sensor's capacity to detect vehicles ahead.
- The size of the vehicle ahead, such as a motorcycle, may also make it difficult to detect. This may result in the warning light illuminating at a shorter distance than the one that has been set, or that the light will not come on at all.

Symbol	Message	Description
		Time interval while it is being set.
		Time interval after it has been set.

Distance alert

Symbol	Message	Description
	Radar blockd See manual	Distance Alert has been temporarily disconnected because the radar is obstructed in some way and cannot detect other vehicles. See page 169 for information on the radar sensor's limitations.
	Collision warn. Service required	Distance Alert or Collision Warning with Auto-brake is not functioning properly. Contact a trained and qualified Volvo service technician.

Driver Alert System (option)

Introduction

The Driver Alert System is designed to help a driver who may be becoming fatigued or who is inadvertently leaving the lane.

The Driver Alert System consists of two different functions that can be switched on together or separately.

- **Driver Alert Control (DAC)**
- **Lane Departure Warning (LDW)**

When one or both of the functions has been switched on, it is in standby mode and is activated when the vehicle exceeds a speed of 40 mph (65 km/h).

The function deactivates if speed goes under 37 mph (60 km/h).

Both functions use a camera that is dependent on the road/lane being clearly marked by painted lines on each side.

WARNING

The Driver Alert system does not function in all situations and is designed to be a supplementary aid. It is not, however, intended to replace the driver's attention and judgement.

Driver Alert Control (DAC)–general information

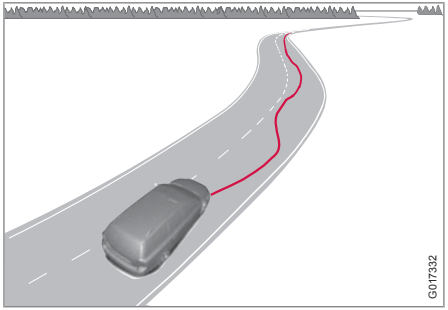

This function is intended to alert the driver if his/her driving becomes erratic, such as if the driver is distracted or fatigued. The camera has certain limitations, see page 170.

A camera monitors the painted lines marking the lane in which the vehicle is traveling and compares the direction of the road with the driver's movements of the steering wheel. The driver is alerted if the vehicle does not follow the lane smoothly.

NOTE

The camera has certain limitations, see page 162.

DAC is designed to help detect a slowly changing driving pattern. It is primarily intended to be used on main roads and is not meant for use in city traffic.

WARNING

- DAC is not intended to extend the duration of driving. Always plan breaks at regular intervals to help remain alert.
- In certain cases, fatigue may not affect the driver's behavior. In situations of this type, no warning will be provided. Therefore, it is important to take breaks at regular intervals, regardless of whether or not DAC has given a warning.

Limitations

In certain situations, DAC may provide warnings even if the driver's driving pattern has not become erratic.

- if the driver is testing the LDW function
- in strong crosswinds
- on grooved road surfaces.

Operating DAC

Certain settings can be made from the menu system controlled from the center instrument panel, see page 120 for more information on the menu system.

The current system status can be checked on the trip computer's display by using the buttons on the left steering wheel lever.

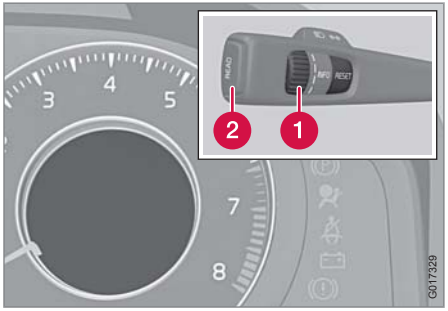

1. Thumb wheel. Turn this wheel until **Driver Alert** is displayed. The second line shows the alternative **Off, Unavailable**, or **[-----]**, i.e., the number of bars.
2. **READ**button. Confirms and erases a message in the display.

Activating DAC

In the center instrument panel, go to **Car settings Driver Alert**and select **On**.

The function is activated when the vehicle exceeds a speed of 40 mph (65 km/h). The display will show level markings of 1–5 bars, where a low number of bars indicates erratic driving. A high number of bars indicates stable driving.

If the vehicle is being driven erratically, the driver will be alerted by an audible signal and the message Driver Alert, Time for a break is displayed. The warning will be repeated after a short time if the driving pattern remains the same.

WARNING

- An alert should be taken seriously since it is sometimes difficult for a driver to realize that he/she is fatigued.
- In the event of a warning or if the driver feels fatigued, stop as soon as possible in a safe place and rest.

Driver Alert System (option)

Symbols and messages in the display

Symbol	Message	Description
	Driver Alert OFF	The function is not switched on.
	Driver Alert Unavailable	The vehicle's speed is below 37 mph (60 km/h) or the road lacks clear marking lines.
	Driver Alert	The function is analyzing the driver's driving pattern. The number of bars varies from 1–5, where a low number of bars indicates erratic driving. A high number of bars indicates stable driving.
	Driver Alert Time for a break	The vehicle has been driven erratically. The driver receives an audible signal and a text message.
	Camera blocked See manual	The camera is temporarily not functioning, due to snow, ice, or dirt on the windshield. Clean the area of the windshield in front of the camera. See page 162 for information on the camera's limitations.
	Driver Alert Sys Service required	The system is not functioning. Contact a trained and qualified Volvo service technician if the message remains in the display.

Lane Departure Warning (LDW)– general information

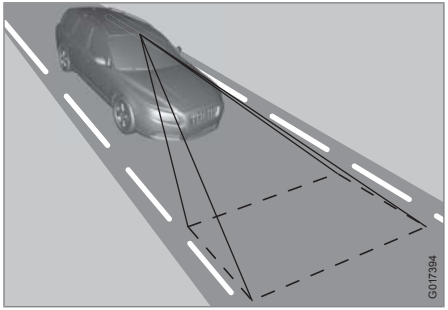

This function is designed to help reduce the risk of accidents in situations where the vehicle leaves its lane and there is a risk of driving off the road or into the opposite lane. LDW consists of a camera that monitors the lane's side marker lines. The driver is alerted by an audible signal if the vehicle crosses a side marker line or the road's center dividing line.

Operation and function

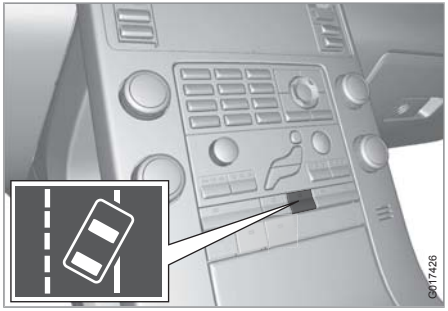

LDW can be switched on or off by pressing the button on the center console. A light in the button illuminates when the function is on.

The trip computer display shows **Lane Depart Warn Unavailable** when the function is in standby mode.

When LDW is in standby mode, the function is activated automatically after the camera has monitored the road's side marker lines and the vehicle's speed exceeds 40 mph (65 km/h). **Lane Depart Warn Available** will be displayed.

If the camera can no longer monitor the road's side marker lines, or if the vehicle's speed falls below 37 mph (60 km/h), LDW will return to standby mode and **Lane Depart Warn Unavailable** will be displayed.

If the vehicle unexpectedly crosses the lane's left or right side marker lines, the driver will be alerted by an audible signal.

No warning signal will be given in the following situations:

- The turn signal is being used
- The driver's foot is on the brake pedal[1]
- The throttle pedal is pressed quickly
- If the steering wheel is moved quickly
- In sharp turns that cause the vehicle's body to sway.

See page 162 for information on the camera's limitations.

WARNING

The driver will only be warned once for each time the wheels cross a marker line. No alarm will be given if a marker line is between the wheels.

[1] A warning will be given even when **Increased sensitivity** has been selected.

Driver Alert System (option)

Symbols and messages in the display

Symbol	Message	Description
	Lane departure warning On/Off	The function is switched on or off. The text disappears after 5 seconds.
	Lane Depart Warn Available	The function is monitoring the road's marker lines.
	Lane Depart Warn Unavailable	Speed is below 37 mph (60 km/h) or if the road lacks clear marker lines.
	Camera blocked See manual	The camera is temporarily not functioning, due to snow, ice, or dirt on the windshield. Clean the area of the windshield in front of the camera. See page 162 for information on the camera's limitations.
	Driver Alert Sys Service required	The system is not functioning. Contact a trained and qualified Volvo service technician if the message remains in the display.

Settings

Settings for Lane Departure Warning can be made in the menu system under Car settings ➔ Lane Departure Warning. See page 120 for more information on the menu system.

On at startup: This selection puts the function in standby mode each time the engine is started. Otherwise, the system will be in the mode that it was in when the engine was switched off.

Increased sensitivity: This selection increases the function's sensitivity. Warnings will be given at an earlier stage and fewer limitations apply.

Park assist (option)

Introduction

The park assist system is designed to assist you when driving into parking spaces, garages, etc. It utilizes four ultrasound sensors located in one or both bumpers to measure the distance to a vehicle, object, or a person who may be close to the front or rear of your vehicle.

This system is available in the rear bumper only, or in both the front and rear bumpers.

Park assist utilizes four ultrasound sensors in the bumper(s) to measure the distance to a vehicle, object, or a person who may be close to the front or rear of your vehicle. An audible signal and symbols in the audio system's display indicate the distance to the object

WARNING

Park Assist is an information system, NOT a safety system. This system is designed to be a supplementary aid when parking the vehicle. It is not, however, intended to replace the driver's attention and judgement.

Function

Park assist button

The system is activated automatically when the vehicle is started. The indicator light in the button in the center console illuminates when the system is on.

- The front park assist system is active from the time the engine is started until the vehicle exceeds a speed of approximately 10 mph (15 km/h). It is also active when the vehicle is backing up.
- Rear park assist is active when the engine is running and reverse gear has been selected.

Activating/deactivating

The system is activated automatically when the vehicle is started.

– Press the Park assist button on the center console to temporarily deactivate the system(s).
  > The indicator light in the button will go out when the system has been deactivated.

Park assist will be automatically reactivated the next time the engine is started, or if the button is pressed (the indicator light in the button will illuminate).

NOTE

- Front park assist is disengaged automatically when the parking brake is applied.
- If the vehicle is equipped with front and rear park assist, both systems will be deactivated by pressing the button.

Park assist (option)

Signals from the park assist system

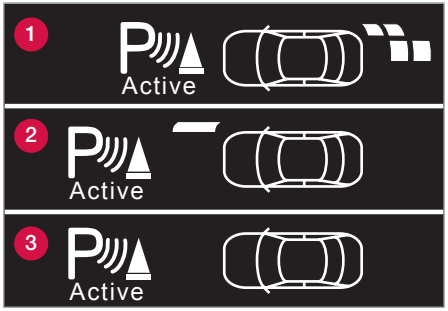

Views in the display

Visual indicator
The audio system's display gives an overview of the vehicle's position in relation to a detected object.

The markers in the display indicate that one or more of the four sensors has detected an object. The greater the number of markers, the closer the vehicle is to the object.

1 Display in a vehicle with rear park assist only. Here, an object has been detected by both of the right rear sensors.

2 Display in a vehicle with both front and rear park assist. The solid marker in this example indicates that an object is closer than approximately 1 foot (30 cm) to the right front sensor.

3 Display in a vehicle with both front and rear park assist. Reverse gear is selected and no objects have been detected in front of or behind the vehicle.

Audible signal
The Park Assist system uses an intermittent tone that pulses faster as you come close to an object, and becomes constant when you are within approximately 1 ft (30 cm) of an object in front of or behind the vehicle (example 2 in the illustration). If there are objects within this distance both behind and in front of the vehicle, the tone alternates between front and rear speakers.

If the volume of another source from the audio system is high, this will be automatically lowered.

Rear park assist

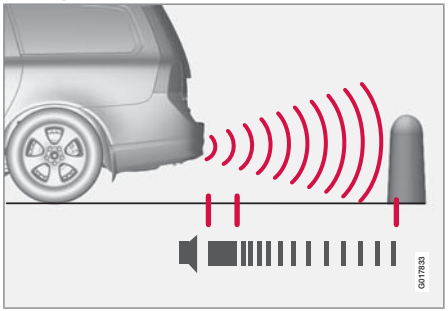

The distance monitored behind the vehicle is approximately 5 ft (1.5 m). The audible signal comes from the rear speakers.

The system must be deactivated when towing a trailer, carrying bicycles in a rear-mounted carrier, etc, which could trigger the rear park assist system's sensors.

NOTE

Rear park assist is deactivated automatically when towing a trailer if Volvo genuine trailer wiring is used.

Front park assist

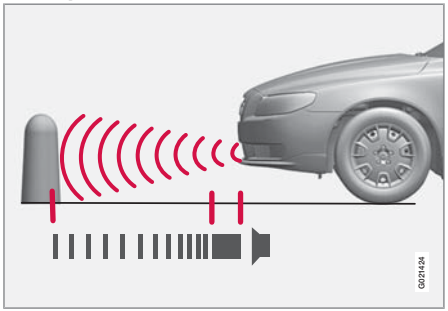

The distance monitored in front of the vehicle is approximately 2.5 ft (0.8 m). The audible signal comes from the audio system's front speakers.

It may not be possible to combine auxiliary headlights and front park assist since these lights could trigger the system's sensors.

Faults in the system

If the information symbol illuminates and **Park Assist syst Service required** is shown on the information display, this indicates that the system is not functioning properly and has been disengaged. Consult a trained and qualified Volvo service technician.

CAUTION

In certain circumstances, the park assist system may give unexpected warning signals that can be caused by external sound sources that use the same ultrasound frequencies as the system. This may include such things as the horns of other vehicles, wet tires on asphalt, pneumatic brakes, motorcycle exhaust pipes, etc. This does not indicate a fault in the system.

Cleaning the sensors

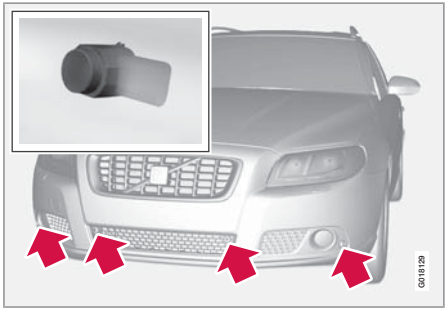

Location of the front sensors

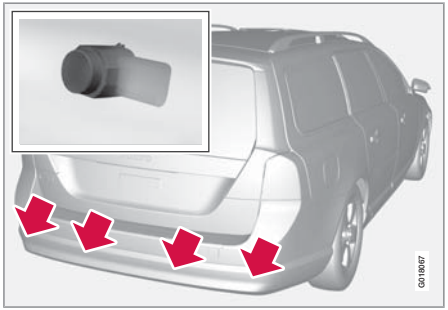

Location of the rear sensors

The sensors must be cleaned regularly to ensure that they work properly. Clean them with water and a suitable car washing detergent.

Ice and snow covering the sensors may cause incorrect warning signals.

NOTE

If the sensors are obstructed by e.g., dirt, snow, or ice, this could result in false warning signals from the park assist system.

Blind Spot Information System (option)

Introduction

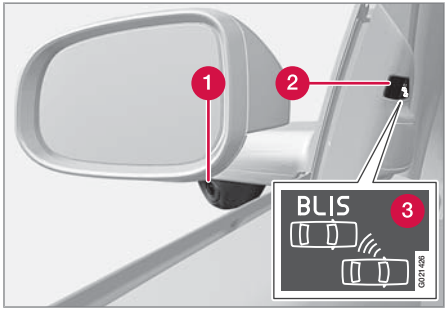

1. BLIS camera
2. Indicator light
3. BLIS symbol

The Blind Spot Information System (BLIS) is an information system that indicates the presence of another vehicle moving in the same direction as your vehicle in the side-view mirror's "blind area."

CAUTION

The BLIS system should only be repaired by a trained and qualified Volvo service technician.

WARNING

- BLIS is an information system, NOT a warning or safety system.
- BLIS does not eliminate the need for you to visually confirm the conditions around you, and the need for you to turn your head and shoulders to make sure that you can safely change lanes.
- As the driver, you have full responsibility for changing lanes in a safe manner.

The system is based on digital camera technology. The cameras are located beneath the side-view mirrors.

When one (or both) of the cameras have detected a vehicle in the blind area (up to approximately 10 ft. (3 meters) from the side of your vehicle, and up to approximately 31 ft. (9.5 meters) behind the side-view mirror), see the illustration, the indicator light in the door panel illuminates. The light will glow continuously to alert the driver of the vehicle in the blind area.

NOTE

The door panel indicator light illuminates on the side of the vehicle where the system has detected another vehicle. If your vehicle is passed on both sides at the same time, both lights will illuminate.

BLIS has an integrated function that alerts the driver if a fault should occur with the system. For example, if one or both of the system's cameras are obscured, a message (see the table on page 187) will appear in the information display in the instrument panel. If this occurs, clean the camera lenses. If necessary, the system can be temporarily switched off (for instructions, see page 186).

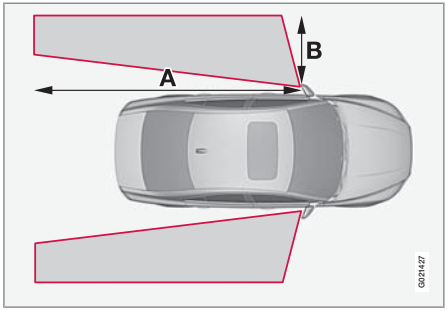

Areas monitored by BLIS Distance A = approx. 31 ft. (9.5 meters), Distance B = approx. 10 ft. (3 meters)

When does BLIS function

The system functions when your vehicle is moving at speeds above 6 mph (10 km/h).

When you pass another vehicle:

The system reacts when you pass another vehicle at a speed of up to 6 mph (10 km/h) faster than that vehicle.

When you are passed by another vehicle:

The system reacts if your vehicle is passed by another vehicle at a speed of up to 43 mph (70 km/h) faster than your vehicle.

WARNING

- BLIS does not function in sharp curves.
- BLIS does not function when your vehicle is backing up.
- If you are towing a wide trailer, this may prevent the BLIS cameras from detecting other vehicles in adjacent lanes.

How BLIS functions in daylight and darkness

Daylight

BLIS reacts to the **shape** of surrounding vehicles. The system is designed to help detect motor vehicles such as cars, trucks, buses, motorcycles, etc.

Darkness

BLIS reacts to the **headlights** of surrounding vehicles. In order to be detected by BLIS, a vehicle in the blind area must have its headlights on. This means, for example, that the system will not detect a trailer without headlights that is being towed behind a car or truck.

WARNING

- BLIS does not react to cyclists or mopeds.
- BLIS does not react to vehicles that are standing still.
- The function of the BLIS cameras may be affected by intense light, or when driving at night in areas where there are no external sources of light (e.g., street lights, other vehicles, etc.). In such cases, the system may react as if the cameras were obscured.
- In both of the above mentioned conditions, a message will appear in the information display.
- When driving in such conditions, the system's function will be limited or it may be temporarily switched off, see page 186 for instructions.
- When the message is no longer displayed, BLIS will return to normal function.
- The BLIS cameras have the same limitation as the human eye. In other words, their "vision is impaired" by adverse weather conditions such as heavy snowfall, dense fog, etc.

Blind Spot Information System (option)

Limitations

In certain situations, the BLIS indicator light(s) may illuminate even when there are no other vehicles in the area monitored by the system.

NOTE

If the BLIS indicator lights illuminate occasionally even when there are no other vehicles in the blind area, this does not indicate a fault in the system.

In the event of a fault, **Blind spot syst. service required** will be displayed.

The following are several examples of situations in which the BLIS indicator light(s) may illuminate even when there are no other vehicles in the area monitored by the system.

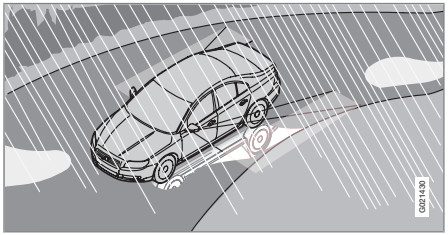

Light reflected from a wet road surface

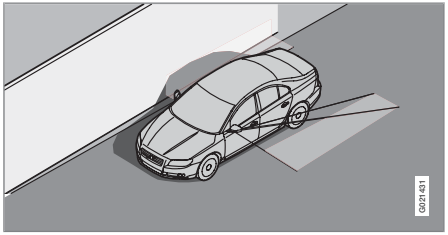

The vehicle's own shadow against a large, light, smooth surface such as barriers between lanes on a highway

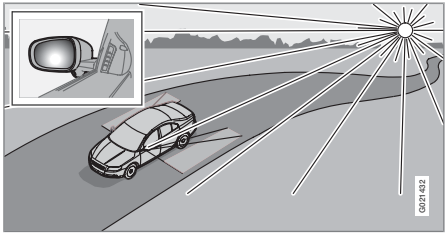

Sunlight directly in the camera when the sun is low on the horizon

Cleaning the BLIS camera lenses

In order to function optimally, the BLIS camera lenses must be kept clean. They can be wiped clean with a soft cloth or wet sponge.

CAUTION

- Clean the lenses carefully to avoid scratching.
- The lenses are electrically heated to help melt ice or snow. If necessary, gently brush away snow from the lenses.

Switching BLIS on and off

BLIS is automatically activated when the ignition is switched on. The indicator lights will provide confirmation by flashing 3 times.

- The system can be switched off by pressing the BLIS button in the center console (see the illustration). The indicator light in the button goes out when the system is

switched off, and a text message is displayed.

- BLIS can be switched on again by pressing the button. The indicator light in the button will illuminate and a new text message will be displayed. Press the READ button (see page 121) to erase the message.

BLIS system messages

Text in the display	System status
Blind spot syst. service required	BLIS not functioning properly. Contact an authorized Volvo service technician.
Blind spot syst. camera blocked	BLIS camera obscured. Clean the lenses.
Blind-spot info system ON	BLIS system on
Blind-spot info system off	BLIS system off
Blind spot syst. reduced function	The BLIS cameras' function has been reduced by e.g., fog, or strong sunlight directly into the camea. The camera will reset itself when these conditions have changed. have been function reduced

Passenger compartment convenience

Storage spaces

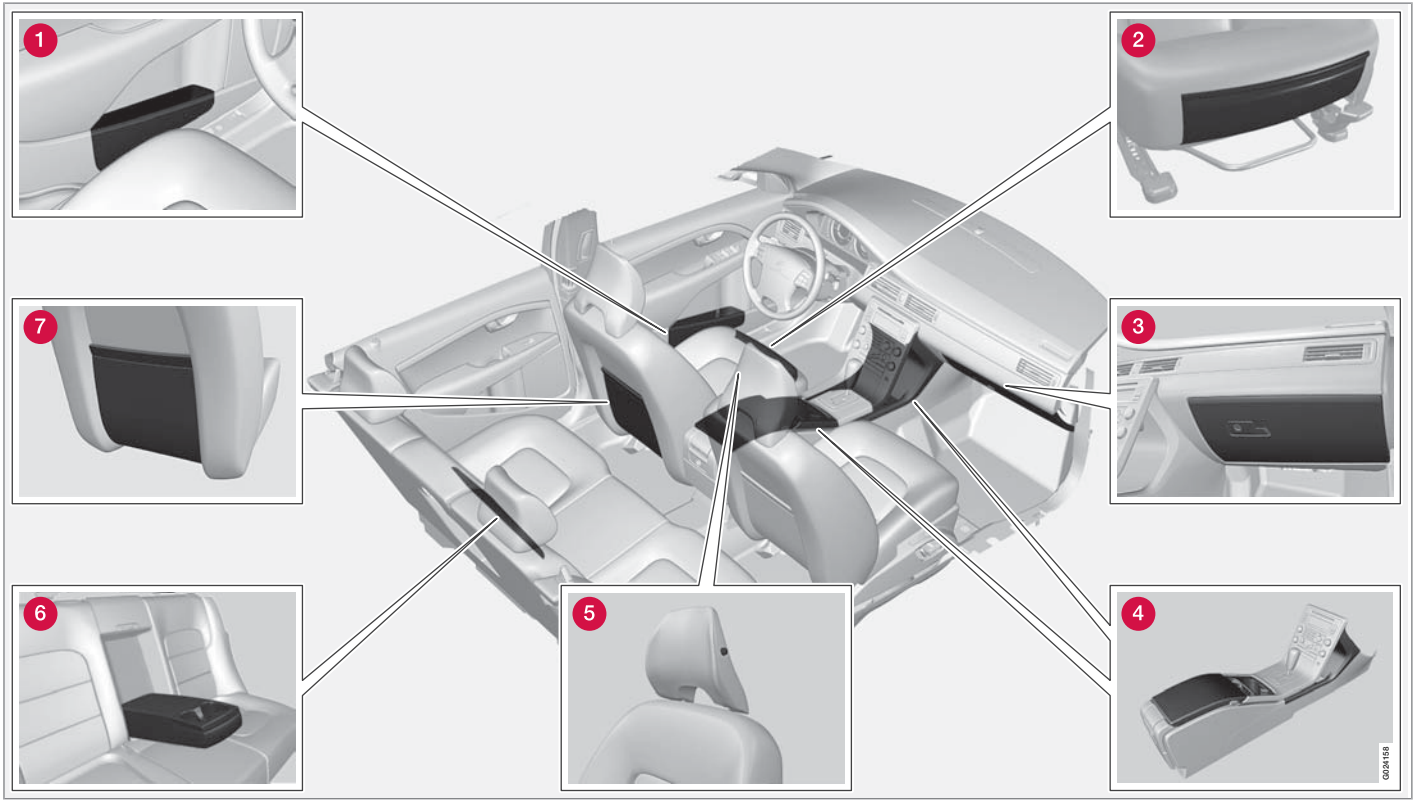

1. Compartment in door panel
2. Storage pocket on the front edge of the front seat cushions
3. Glove compartment
4. Storage compartment, 12-volt socket and AUX input
5. Jacket holder
6. Rear seat cup holders
7. Storage pocket

Jacket holder

The jacket hanger is located on the inboard side of the front passenger's seat head restraint. It is only intended for hanging light garments.

Tunnel console

1. Storage compartment (for CDs, etc.) under armrest.
2. Includes cup holder for driver and passenger, 12 V socket and small storage compartment.

Cigarette lighter and ashtray (option)

Your Volvo retailer has lighters and ashtrays available as accessories.

Glove compartment

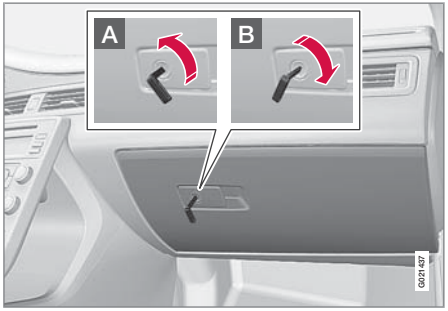

The owner's manual and maps can be kept here. There are also holders for pens and fuel cards. The glove compartment can be locked manually with the key blade, see page 63.

Passenger compartment convenience

Vanity mirror

Vanity mirror with lighting

The light comes on automatically when the cover is lifted.

12-volt sockets

12-volt socket in the front tunnel console

12-volt socket in the rear center console

The electrical socket can be used for 12-volt accessories such as cell phone chargers and coolers. The maximum current is 10 A. For the socket to supply current, the ignition must be in at least mode **I**, see page 77.

WARNING

Always keep the sockets covered when not in use.

12-volt socket in the cargo area (option)

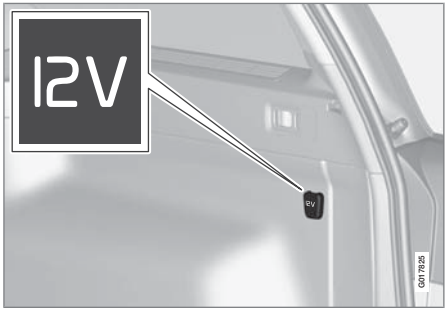

Fold down the cover to access the electrical socket.

NOTE

The 12-volt socket in the cargo area provides electrical current even when the ignition is switched off. Using the socket while the engine is not running will drain the battery.

Driving recommendations..... 194
Refueling..... 198
Loading..... 202
Cargo area..... 207
Towing a trailer..... 210
Emergency towing..... 212

DURING YOUR TRIP

05

Driving recommendations

General information

Economical driving conserves natural resources
Better driving economy may be obtained by thinking ahead, avoiding rapid starts and stops and adjusting the speed of your vehicle to immediate traffic conditions.

Observe the following rules:

- Bring the engine to normal operating temperature as soon as possible by driving with a light foot on the accelerator pedal for the first few minutes of operation. A cold engine uses more fuel and is subject to increased wear.
- Whenever possible, avoid using the vehicle for driving short distances. This does not allow the engine to reach normal operating temperature.
- Drive carefully and avoid rapid acceleration and hard braking.
- Use the transmission's Drive (**D**) position as often as possible and avoid using kick-down.
- Do not exceed posted speed limits.
- Avoid carrying unnecessary items (extra load) in the vehicle.
- Maintain correct tire pressure. Check tire pressure regularly (when tires are cold).
- Remove snow tires when threat of snow or ice has ended.
- Note that roof racks, ski racks, etc, increase air resistance and also fuel consumption.
- At highway driving speeds, fuel consumption will be lower with the air conditioning on and the windows closed than with the air conditioning off and the windows open.
- Using the onboard trip computer's fuel consumption modes can help you learn how to drive more economically.

Other factors that decrease gas mileage are:

- Dirty air cleaner
- Dirty engine oil and clogged oil filter
- Dragging brakes
- Incorrect front end alignment

Some of the above mentioned items and others are checked at the standard maintenance intervals.

WARNING

Driving with the tailgate open: Driving with the tailgate open could lead to poisonous exhaust gases entering the passenger compartment. If the tailgate must be kept open for any reason, proceed as follows:

- Close the windows
- Set the ventilation system control to air flow to floor, windshield and side windows and the blower control to its highest setting.

Weight distribution affects handling
At the specified curb weight your vehicle has a tendency to understeer, which means that the steering wheel has to be turned more than might seem appropriate for the curvature of a bend. This ensures good stability and reduces the risk of rear wheel skid. Remember that these properties can alter with the vehicle load. The heavier the load in the cargo area, the less the tendency to understeer.

Handling, roadholding
Vehicle load, tire design and inflation pressure all affect vehicle handling. Therefore, check that the tires are inflated to the recommended pressure according to the vehicle load. See the "Tire pressure" section. Loads should be distributed so that capacity weight or maximum permissible axle loads are not exceeded.

Driving through water

- The vehicle can be driven through water up to a depth of approximately 10 in. (25 cm), at a maximum speed of 6 mph (10 km/h).
- Take particular care when driving through flowing water.
- Clean the electrical connections for trailer wiring after driving in mud or water.
- When driving through water, maintain low speed and do not stop in the water.

WARNING

After driving through water, press lightly on the brake pedal to ensure that the brakes are functioning normally. Water or mud can make the brake linings slippery, resulting in delayed braking effect.

CAUTION

- Engine damage will occur if water is drawn into the air cleaner.
- If the vehicle is driven through water deeper than 10 in (25 cm), water may enter the differential and the transmission. This reduces the oil's lubricating capacity and may shorten the service life of these components.
- Do not allow the vehicle to stand in water up to the door sills longer than absolutely necessary. This could result in electrical malfunctions.
- If the engine has been stopped while the vehicle is in water, do not attempt to restart it. Have the vehicle towed out of the water.

Engine and cooling system

Under special conditions, for example when driving in hilly terrain, extreme heat or with heavy loads, there is a risk that the engine and cooling system will overheat. Proceed as follows to avoid overheating the engine.

- Maintain a low speed when driving with a trailer up long, steep hills.
- Do not turn the engine off immediately when stopping after a hard drive.

WARNING

The cooling fan may start or continue to operate (for up to 6 minutes) after the engine has been switched off.

- Remove any auxiliary lights from in front of the grille when driving in hot weather conditions.
- Do not exceed engine speeds of 4500 rpm if driving with a trailer in hilly terrain. The oil temperature could become too high.

Conserving electrical current

Keep the following in mind to help minimize battery drain:

- When the engine is not running, avoid using ignition mode **II**. Many electrical systems (the audio system, the optional navigation system, power windows, etc) will function in ignition modes **0** and **I**. These modes reduce drain on the battery.
- Please keep in mind that using systems, accessories, etc., that consume a great deal of current when the engine is not running could result in the battery being completely drained.
- The optional 12 volt socket in the cargo area provides electrical current even with the ignition switched off, which drains the battery.

Driving recommendations

Before a long distance trip

It is always worthwhile to have your vehicle checked by a trained and qualified Volvo service technician before driving long distances. Your retailer will also be able to supply you with bulbs, fuses, spark plugs and wiper blades for your use in the event that problems occur.

As a minimum, the following items should be checked before any long trip:

- Check that engine runs smoothly and that fuel consumption is normal.
- Check for fuel, oil, and fluid leakage
- Have the transmission oil level checked.
- Check condition of drive belts.
- Check state of the battery's charge.
- Examine tires carefully (the spare tire as well), and replace those that are worn. Check tire pressures.
- The brakes, front wheel alignment, and steering gear should be checked by a trained and qualified Volvo service technician only.
- Check all lights, including high beams.
- Reflective warning triangles are legally required in some states/provinces.
- Have a word with a trained and qualified Volvo service technician if you intend to drive in countries where it may be difficult to obtain the correct fuel.
- Consider your destination. If you will be driving through an area where snow or ice are likely to occur, consider snow tires.

Cold weather precautions

If you wish to check your vehicle before the approach of cold weather, the following advice is worth noting:

- Make sure that the engine coolant contains 50 percent antifreeze. Any other mixture will reduce freeze protection. This gives protection against freezing down to –31 °F (–35 °C). The use of "recycled" antifreeze is not approved by Volvo. Different types of antifreeze must not be mixed.
- Volvo recommends using only genuine Volvo antifreeze in your vehicle's radiator.
- Try to keep the fuel tank well filled – this helps prevent the formation of condensation in the tank. In addition, in extremely cold weather conditions it is worthwhile to add fuel line de-icer before refueling.
- The viscosity of the engine oil is important. Oil with low viscosity (thinner oil) improves cold-weather starting as well as decreasing fuel consumption while the engine is warming up. For winter use, 5W-30 oil, particularly the synthetic type, is recommended. Be sure to use good quality oil but do not use cold-weather oil for hard driving or in warm weather, see page 272 for more information on engine oil.

NOTE

Synthetic oil is not used when the oil is changed at the normal maintenance intervals except at owner request and at additional charge.

- The load placed on the battery is greater during the winter since the windshield wipers, lighting, etc. are used more often. Moreover, the capacity of the battery decreases as the temperature drops. In very cold weather, a poorly charged battery can freeze and be damaged. It is therefore advisable to check the state of charge more frequently and spray an anti-rust oil on the battery posts.
- Volvo recommends the use of snow tires on all four wheels for winter driving, see page 253.
- To prevent the washer fluid reservoir from freezing, add washer solvents containing antifreeze. This is important since dirt is often splashed on the windshield during winter driving, requiring the frequent use of the washers and wipers. Volvo Washer Solvent should be diluted as follows: Down to 14 °F (–10 °C): 1 part washer solvent and 4 parts water Down to 5 °F (–15 °C): 1 part washer solvent and 3 parts water Down to 0 °F (–18 °C): 1 part washer solvent and

2 parts water Down to –18 °F (–28 °C):
1 part washer solvent and 1 part water.

- Use Volvo Teflon Lock Spray in the locks.
- Avoid using de-icing sprays as they can cause damage to the locks.

Refueling

Fuel requirements

Deposit control gasoline (detergent additives)
Volvo recommends the use of detergent gasoline to control engine deposits. Detergent gasoline is effective in keeping injectors and intake valves clean. Consistent use of deposit control gasolines will help ensure good drivability and fuel economy. If you are not sure whether the gasoline contains deposit control additives, check with the service station operator.

NOTE

Volvo does not recommend the use of external fuel injector cleaning systems.

Unleaded fuel
Each Volvo has a three-way catalytic converter and must use only unleaded gasoline. U.S. and Canadian regulations require that pumps delivering unleaded gasoline be labelled "UNLEADED". Only these pumps have nozzles which fit your vehicle's filler inlet. It is unlawful to dispense leaded fuel into a vehicle labelled "unleaded gasoline only". Leaded gasoline damages the three-way catalytic converter and the heated oxygen sensor system. Repeated use of leaded gasoline will lessen the effectiveness of the emission control system and could result in loss of emission warranty coverage. State and local vehicle inspection programs will make detection of misfueling easier, possibly resulting in emission test failure for misfueled vehicles.

NOTE

Some U.S. and Canadian gasolines contain an octane enhancing additive called methylcyclopentadienyl manganese tricarbonyl (MMT). If such fuels are used, your Emission Control System performance may be affected, and the Check Engine Light (malfunction indicator light) located on your instrument panel may light. If this occurs, please return your vehicle to a trained and qualified Volvo service technician for service.

Gasoline containing alcohol and ethers, "Oxygenated fuels"
Some fuel suppliers sell gasoline containing "oxygenates" which are usually alcohols or ethers. In some areas, state or local laws require that the service pump be marked indicating use of alcohols or ethers. However, there are areas in which the pumps are unmarked. If you are not sure whether there is alcohol or ethers in the gasoline you buy, check with the service station operator. To meet seasonal air quality standards, some areas require the use of "oxygenated" fuel.

Volvo allows the use of the following "oxygenated" fuels; however, the octane ratings listed on page 199 must still be met.

Alcohol – Ethanol
Fuels containing up to 10% ethanol by volume may be used. Ethanol may also be referred to as Ethyl alcohol, or "Gasohol".

Ethers – MTBE: Fuels containing up to 15% MTBE may be used.

Methanol
Do not use gasolines containing methanol (methyl alcohol, wood alcohol). This practice can result in vehicle performance deterioration and can damage critical parts in the fuel system. Such damage may not be covered under the New Vehicle Limited Warranty.

Octane rating

Minimum octane

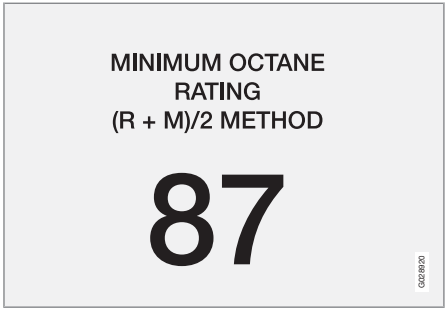

Typical pump octane label

Volvo recommends premium fuel for best performance, but using 87 octane or above will not affect engine reliability.

Volvo engines are designed to achieve rated horsepower, torque, and fuel economy performance using premium 91 octane fuel.

Demanding driving

In demanding driving conditions, such as operating the vehicle in hot weather, towing a trailer, or driving for extended periods at higher altitudes than normal, it may be advisable to switch to higher octane fuel (91 or higher) or to change gasoline brands to fully utilize your engine's capacity, and for the smoothest possible operation.

NOTE

When switching to higher octane fuel or changing gasoline brands, it may be necessary to fill the tank more than once before a difference in engine operation is noticeable.

Fuel Formulations

Do not use gasoline that contains lead as a knock inhibitor, and do not use lead additives. Besides damaging the exhaust emission control systems on your vehicle, lead has been strongly linked to certain forms of cancer.

Many fuels contain benzene as a solvent. Unburned benzene has been strongly linked to certain forms of cancer. If you live in an area where you must fill your own gas tank, take precautions. These may include:

- standing upwind away from the filler nozzle while refueling
- refueling only at gas stations with vapor recovery systems that fully seal the mouth of the filler neck during refueling
- wearing neoprene gloves while handling a fuel filler nozzle.

Use of Additives

With the exception of gas line antifreeze during winter months, do not add solvents, thickeners, or other store-bought additives to your vehicle's fuel, cooling, or lubricating systems. Overuse may damage your engine, and some of these additives contain organically volatile chemicals. Do not needlessly expose yourself to these chemicals.

WARNING

Never carry a cell phone that is **switched on** while refueling your vehicle. If the phone rings, this may cause a spark that could ignite gasoline fumes, resulting in fire and injury.

WARNING

Carbon monoxide is a poisonous, colorless, and odorless gas. It is present in all exhaust gases. If you ever smell exhaust fumes inside the vehicle, make sure the passenger compartment is ventilated, and immediately return the vehicle to a trained and qualified Volvo service technician for correction.

Refueling

Opening/closing the fuel filler door

The fuel filler door is located on the right rear fender (indicated by an arrow beside the fuel tank symbol on the information display).

With the ignition switched off, press the button on the lighting panel to unlock the fuel filler door. Please note that the fuel filler door will remain unlocked until the vehicle begins to move forward. An audible click will be heard when the fuel filler door relocks.

- If you intend to leave your vehicle while it is being refueled, this feature enables you to lock the doors/tailgate while leaving the fuel filler door unlocked.
- You can also keep the vehicle locked if you remain inside it during refueling. The central locking button does not lock the fuel filler door.
- Be sure the fuel filler door is not obstructed and is completely closed after refueling.
- Open the fuel filler cap slowly during hot weather.

Close the fuel filler door by pressing it a click indicates that it is closed.

CAUTION

- Avoid spilling gasoline during refueling. In addition to causing damage to the environment, gasolines containing alcohol can cause damage to painted surfaces, which may not be covered under the New Vehicle Limited Warranty.

Manually opening the fuel filler door

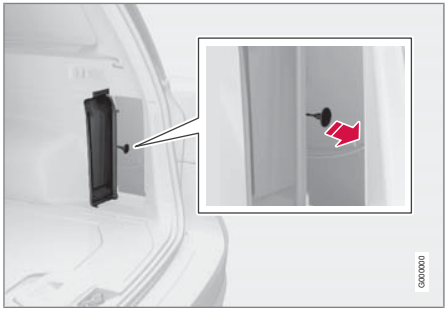

If necessary, the fuel filler door can be opened manually:

1. Open the side hatch in the cargo compartment (on the same side as the fuel filler door).
2. Grasp the green cord with a handle.
3. Pull the cord straight rearward until the fuel filler door clicks open.

Opening/closing the fuel cap

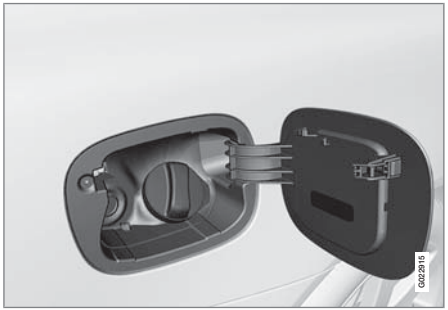

Fuel vapor expands in hot weather. Open the filler cap slowly.

After refueling, close the fuel filler cap by turning it clockwise until it clicks into place.

CAUTION

- Do not refuel with the engine running[1]. Turn the ignition off or to position **I**. If the ignition is on, an incorrect reading could occur in the fuel gauge.
- Avoid overfilling the fuel tank. Do not press the handle on the filler nozzle more than one extra time. Too much fuel in the tank in hot weather conditions can cause the fuel to overflow. Overfilling could also cause damage to the emission control systems.

Emission controls

Three-way catalytic converter

- Keep your engine properly tuned. Certain engine malfunctions, particularly involving the electrical, fuel or distributor ignition systems, may cause unusually high three-way catalytic converter temperatures. Do not continue to operate your vehicle if you detect engine misfire, noticeable loss of power or other unusual operating conditions, such as engine overheating or backfiring. A properly tuned engine will help avoid malfunctions that could damage the three-way catalytic converter.
- Do not park your vehicle over combustible materials, such as grass or leaves, which can come into contact with the hot exhaust system and cause such materials to ignite under certain wind and weather conditions.
- Excessive starter cranking (in excess of one minute), or an intermittently firing or flooded engine can cause three-way catalytic converter or exhaust system overheating.
- Remember that tampering or unauthorized modifications to the engine, the Engine Control Module, or the vehicle may be illegal and can cause three-way catalytic converter or exhaust system overheating. This includes: altering fuel injection settings or components, altering emission system components or location or removing components, and/or repeated use of leaded fuel.

NOTE

Unleaded fuel is required for vehicles with three-way catalytic converters.

Heated oxygen sensors

The heated oxygen sensors monitor the oxygen content of the exhaust gases. Readings are fed into a control module that continuously monitors engine functions and controls fuel injection. The ratio of fuel to air into the engine is continuously adjusted for efficient combustion to help reduce harmful emissions.

[1] If the fuel filler cap is not closed tightly or if the engine is running when the vehicle is refueled, the Check Engine Light (malfunction indicator lamp) may indicate a fault. However, your vehicle's performance will not be affected. Use only Volvo original or approved fuel filler caps.

Loading

Introduction

The load carrying capacity of your vehicle is determined by factors such as the number of passengers, the amount of cargo, the weight of any accessories that may be installed, etc.

To increase loading space, the rear seat backrests can be folded down, See page 81.

When loading the cargo area, keep the following in mind:

- Load objects in the cargo area against the backrest whenever possible.
- Unstable loads can be secured to the load anchoring eyelets with straps or web lashings to help keep them from shifting.
- Stop the engine and apply the parking brake when loading or unloading long objects. The gear selector can be knocked out of position by long loads, which could set the vehicle in motion.

WARNING

- Stop the engine, put the gear selector in **P**, and apply the parking brake when loading or unloading long objects.
- The vehicle's driving characteristics may change depending on the weight and distribution of the load.
- A 44-pound (20 kg) object produces a force of 2,200 pounds (1,000 kg) in a headon collision at 30 mph (50 km/h).
- The cargo area and rear seat should not be loaded to a level higher than 2 in. (5 cm) below the upper edge of the rear side windows. Objects placed higher than this level could impede the function of the Volvo Inflatable Curtain.

Power tailgate (option)

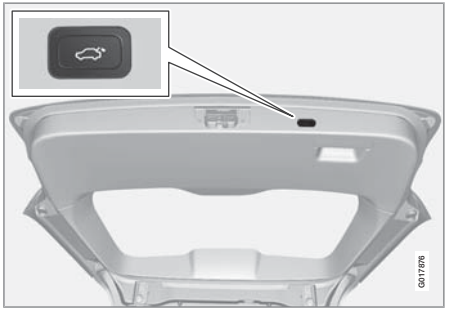

Power tailgate closing button

Automatic opening

The power tailgate can be opened automatically in the three ways:

- By pressing and holding the button on the lighting panel, (see page 64) until the tailgate begins to open.
- By pressing and holding the button on the remote key (see page 64) until the tailgate begins to open.
- By pulling the outer handle on the tailgate.

The taillights illuminate automatically when the automatic open function is used.

CAUTION

Be sure that there is adequate space above and behind the vehicle before opening the tailgate automatically.

NOTE

If the tailgate has been opened and closed continuously for more than 90 seconds, the automatic function will be deactivated to avoid overloading the electrical system. The automatic function can be used again after approximately 10 minutes.

Automatic closing

The power tailgate can be closed by pressing the button on the tailgate (see the illustration) or by pressing it down.

NOTE

If the tailgate is pressed down e.g., by the weight of snow or strong wind, it will close automatically.

WARNING

Be sure that no one is near the tailgate when it is opened or closed automatically. The tailgate should never be obstructed in any way when it is operated.

Interrupting automatic opening/closing

Automatic opening or closing the tailgate can be interrupted in four ways:

- By pressing the button on the lighting panel.
- By pressing the button on the remote key for several seconds.
- By pressing the button on the lower edge of the tailgate.
- By pulling the outer handle on the tailgate a second time.

If one of these actions is taken:

- While the tailgate is being **opened**, the electrical function will be switched off and the tailgate will be released from the electrical system.
- While the tailgate is being **closed**, it will return to the fully open position.

Pinch protection

If the tailgate is obstructed while it is being operated, the pinch protection function is activated.

- If the tailgate is being **opened**, the electrical function will be switched off and the tailgate will be released from the electrical system.
- If the tailgate is being **closed**, it will move in the opposite direction.

Operating the tailgate manually

The power tailgate can be disconnected from the vehicle's electrical system by quickly pulling the outer handle twice. The tailgate can then be opened/closed manually.

Load anchoring eyelets

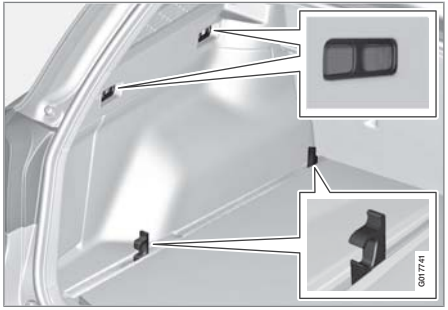

The load anchoring eyelets on both sides of the vehicle are used to fasten straps, etc., to help anchor items in the cargo area.

Loading

WARNING

- Cover sharp edges on long loads to help prevent injury to occupants. Secure the load to help prevent shifting during sudden stops.
- Always secure large and heavy objects with a seat belt or cargo retaining straps.
- Always secure the load to help prevent it from moving in the event of sudden stops.
- Switch off the engine, apply the parking brake and put the gear selector in **P** when loading and unloading the vehicle.

Cargo area floor rails and hooks

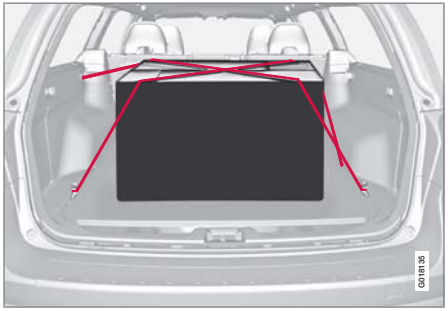

Load secured in upper and lower hooks

The floor of the cargo compartment has rails on opposite sides of the vehicle equipped with hooks for anchoring loads with straps, nets, etc.

Cleaning the rails

Dirt or other small objects that collect in the rails can make moving, locking, unlocking, and removing the hooks more difficult. Objects can be removed from the rails with a vacuum cleaner, and the rails can be cleaned with a moist cloth.

Moving the load anchoring hooks

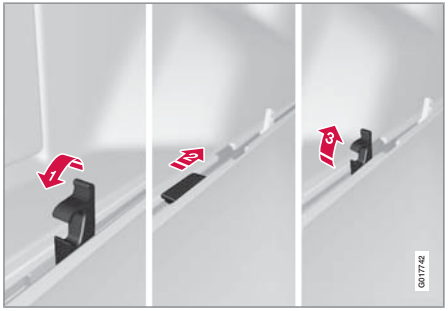

1. To move a hook, fold it down in the direction in which its opening points.
2. Press the hook down lightly and move it to the desired position.
3. Fold up the hook. It will lock in place.

NOTE

There should be at least 2 in. (50 cm) between the hooks in the rail.

WARNING

Switch off the engine, apply the parking brake and put the gear selector in **P** when loading and unloading the vehicle.

Removing a hook

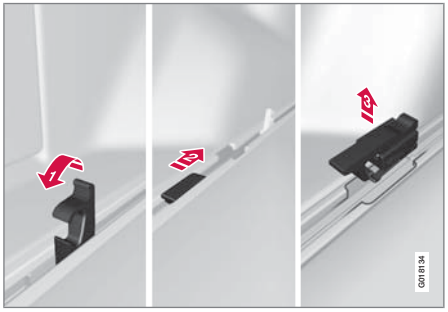

The load-securing hooks can easily be removed, for example, to clean the rail.

1. To remove a hook, fold it down in the direction in which its opening points.

2. Press the hook down lightly and move the it to an opening in the rail.
3. Pull the hook straight up.

Replace a hook in the rail in the reverse order.

NOTE

In order to return a removed hook into a rail, it must be press down lightly.

Reinserting a hook

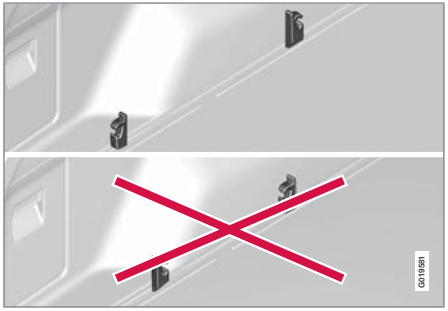

Upper illustration: hooks correctly installed, Lower illustration: hooks incorrectly installed

It is important to insert the hooks correctly in the rails. The hooks' openings should point **away** from each other.

- The opening on the hook closest to the rear seat backrest should point toward the backrest.
- The opening on the hook closest to the tailgate should point toward the tailgate.

WARNING

The hooks must be installed correctly in the rail. Incorrectly installed hooks will be folded down by the strap, allowing them to move. The load will then no longer be securely anchored.

Straps for securing loads

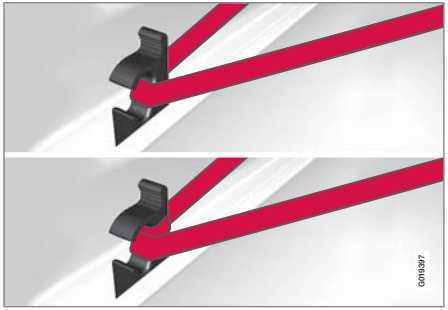

Securing loads

Wrapping straps a full turn around the hooks helps keep them in place.

NOTE

The straps should preferably be approximately 1 in. (25 mm) in width.

Grocery bag holder[1] (option)

Grocery bag holder under the floor of the cargo area

The grocery bag holder holds shopping bags in place.

1. Open the hatch in the floor of the cargo area.
2. Secure the shopping bags with the strap.

[1] Available on certain markets only.

Loading

Roof loads

Using load carriers

Load carriers are available as Volvo accessories. Observe the following points when in use:

- To avoid damaging your vehicle and to achieve maximum safety when driving, we recommend using the load carriers that Volvo has developed especially for your vehicle.
- Volvo-approved removable roof racks are designed to carry the maximum allowable roof load for this vehicle: 220 lbs (100 kg). For non-Volvo roof racks, check the manufacturer's weight limits for the rack.
- Never exceed the rack manufacturer's weigh limits and never exceed the maximum rated roof load of 220 lbs (100 kg).
- Avoid single-point loads. Distribute loads evenly.
- Place heavier cargo at the bottom of the load.
- Secure the cargo correctly with appropriate tie-down equipment.
- Check periodically that the load carriers and load are properly secured.
- Remember that the vehicle's center of gravity and handling change when you carry a load on the roof.
- The vehicle's wind resistance and fuel consumption will increase with the size of the load.
- Drive smoothly. Avoid rapid starts, fast cornering and hard braking.

Steel cargo grid (option)

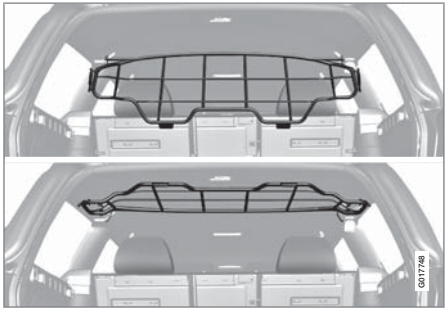

Your vehicle can be equipped with a steel grid that helps prevent objects in the cargo area from moving forward into the passenger compartment.

Folding the grid up/down

Grasp the lowering edge of the grid and pull it rearward/upward, or push it downward/forward.

NOTE

If the steel grid is to be used with the optional cargo area cover, the grid must be folded down before the cargo area cover is put in place.

Installing the steel cargo grid

In order to install the steel grid, the rear seat backrests must be completely folded down, see page 81 for instructions.

NOTE

- The steel cargo grid is easiest to install by two people, and should be folded down.
- When installing the grid, the handle should be on the front side of the grid (see illustrations 1 – 3).
- The rear seat backrests must be folded down when installing the steel cargo grid, see page 81.

1 Put the handle in the installation position, see the illustration. Press lightly on the handle in order to turn it to this position, see the arrow.

2 Press in the piston toward the grid and press it into the attachment bracket near the ceiling.

3 Turn the handle 90° 1. Press lightly as shown in illustration 1 if necessary. Attach the grid 2 by moving the handle 90°.

Do the same on the opposite side of the vehicle.

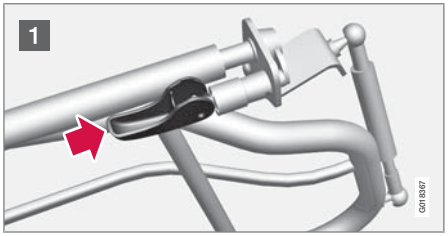

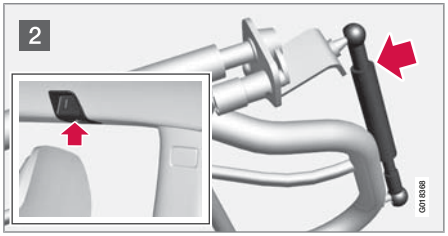

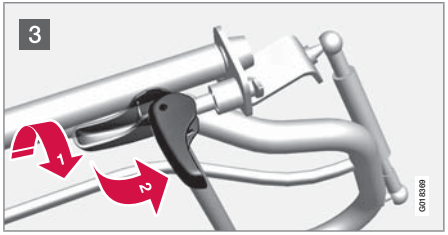

Installing the cargo grid

Cargo area

Cargo area cover (option)

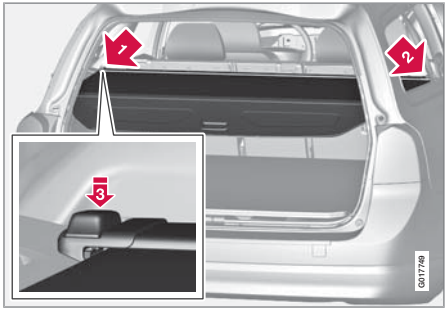

Use

- Pull the cover over the cargo and hook it into the holes in the rear cargo area pillars.
- To retract (roll up) the cover, release it from the holes and guide it toward the rear seat backrest.

Installing the cover

1. Press the end piece on one side of the cargo area cover into the retaining bracket in the side panel of the cargo area 1.
2. Do the same on the opposite side 2.
3. Press both sides of the cover until they click into place 3. The red mark will no longer be visible.
4. Check that both ends of the cover are securely locked in place.

Removing the cover

1. Press one of the end pieces of the cover inward.
2. Pull the cover carefully upward and outward. The other end will release automatically from its retaining bracket.

Folding down the cargo area cover's rear flap

The cargo area cover's rear flap points horizontally when the cover is retracted (rolled up). To fold it down:

– Pull the flap slightly rearward past its supports and fold it down.

NOTE

On models equipped with this cover, it should be removed before a child seat is attached to the child restraint anchors. See page 43 for more information.

Cargo net (option)

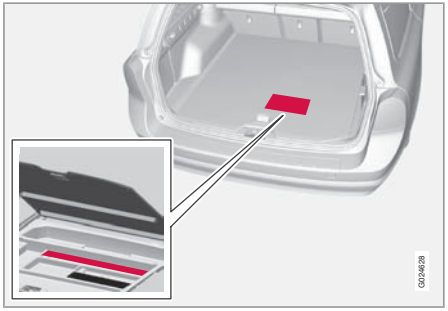

Storage compartment for the cargo net

Two cassettes containing nylon cargo nets are stored in a compartment under the cargo area floor.

Attaching the cassette(s)

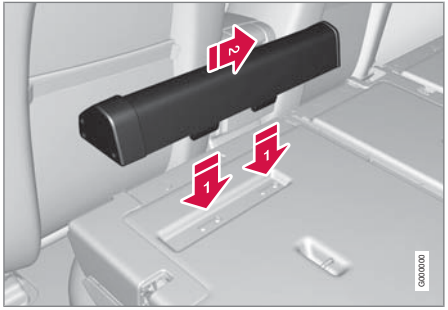

Cargo area

The two-sections of the net are attached to the rear side of the rear seat backrest. The cassettes have different widths, and the widest section should be mounted on the right side (seen from the rear of the vehicle).

1. Fold down the rear seat backrests.
2. Align the cassette's mounting rail above the mounting brackets on the backrest 1.
3. Slide the cassette onto the mounting brackets 2.
4. Return the backrest to the upright position.

Using the net(s)

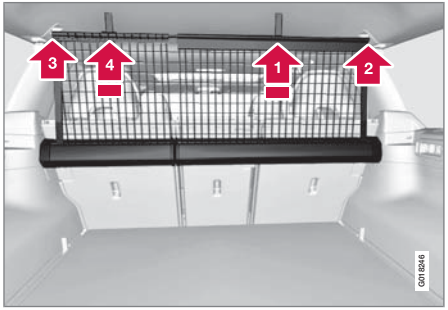

With the backrests upright

The net is pulled up from the cassette and locks in position after approximately 1 minute.

1. Pull up the right side of the net by grasping its strap.
2. Insert the net's rod in the retaining bracket on the right side near the ceiling and press it forward. It will click into place.
3. Extend the left section of the rod and insert it in the bracket on the left side of the cargo compartment. Press it forward until it clicks into place.
4. Pull up the left side of the cargo net and secure it on the rod.

NOTE

- The net can be fastened in the same way if the rear seat backrests are folded down. In this case, use the retaining brackets near the ceiling, above the front seats.
- The front passenger's seat backrest can also be folded down for carrying long objects, see page 79.

Removing the cargo net cassettes

1. Retract the net(s) in the reverse order (See page 209, "With the backrests upright")
2. Fold the entire rear seat backrest down.
3. Slide the cassettes outward until they release from the mounting brackets.

WARNING

- When not in use, return the cassettes to their storage compartment under the cargo area floor.
- Objects in the cargo area should be securely anchored, even if the cargo net is correctly installed and in use.

Using the cargo net with the cargo area cover

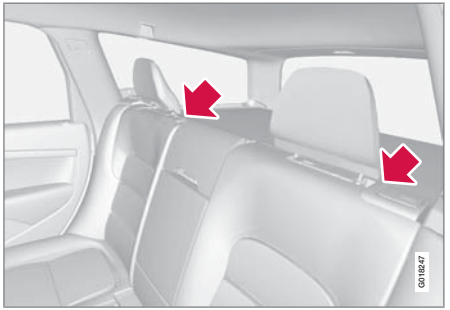

Straps for pulling up the net

The cargo net(s) can also be pulled up from the backrest when the cargo area cover is pulled out.

The straps for pulling up the cargo net are located at the arrows in the illustration. Follow the same procedure as for using the nets with the backrests upright.

Towing a trailer

Introduction

Volvo recommends the use of Volvo trailer hitches that are specially designed for the vehicle.

NOTE

See page 271 for the maximum trailer and tongue weights recommended by Volvo.

- Observe the legal requirements of the state/province in which the vehicles are
- All Volvo models are equipped with energy-absorbing shock-mounted bumpers. Trailer hitch installation should not interfere with the proper operation of this bumper system.

Trailer towing does not normally present any particular problems, but take into consideration:

- Increase tire pressure to recommended full. See the tire inflation tables on pages 248 and 249.
- When your vehicle is new, avoid towing heavy trailers during the first 620 miles (1,000 km).
- Maximum speed when towing a trailer: 50 mph (80 km/h).
- Engine and transmission are subject to increased loads. Therefore, engine coolant temperature should be closely watched when driving in hot climates or hilly terrain. Use a lower gear and turn off the air conditioner if the temperature gauge needle enters the red range.
- If the automatic transmission begins to overheat, a message will be displayed in the text window.
- Avoid overload and other abusive operation.
- Hauling a trailer affects handling, durability, and economy.
- It is necessary to balance trailer brakes with the towing vehicle brakes to provide a safe stop (check and observe state/local regulations).
- Do not connect the trailer's brake system directly to the vehicle's brake system.
- More frequent vehicle maintenance is required.
- Remove the ball and drawbar assembly when the hitch is not being used.
- Volvo recommends the use of synthetic engine oil when towing a trailer over long distances or in mountainous areas.

WARNING

- Bumper-attached trailer hitches must not be used on Volvos, nor should safety chains be attached to the bumper.
- Trailer hitches attaching to the vehicle rear axle must not be used.
- Never connect a trailer's hydraulic brake system directly to the vehicle brake system, nor a trailer's lighting system directly to the vehicle lighting system. Consult your nearest authorized Volvo retailer for correct installation.
- When towing a trailer, the trailer's safety wire must be correctly fastened to the hole or hook provided in the trailer hitch on the vehicle. The safety wire should never be fastened to or wound around the drawbar ball.

NOTE

- When parking the vehicle with a trailer on a hill, apply the parking brake before putting the gear selector in **P**. Always follow the trailer manufacturer's recommendations for wheel chocking.
- When starting on a hill, put the gear selector in **D** before releasing the parking brake. See also page 115 for more detailed information about starting off on a hill while towing a trailer.
- If you use the manual (Geartronic) shift positions while towing a trailer, make sure the gear you select does not put too much strain on the engine (using too high a gear).
- The drawbar assembly/trailer hitch may be rated for trailers heavier than the vehicle is designed to tow. Please adhere to Volvo's recommended trailer weights.
- Avoid driving with a trailer on inclines of more than 15 %.

Trailer cable

An adapter is required if the vehicle's trailer hitch has a 13-pin connector and the trailer has 7 pins. Use an adapter cable approved by Volvo. Make sure the cable does not drag on the ground.

Detachable trailer hitch (accessory)

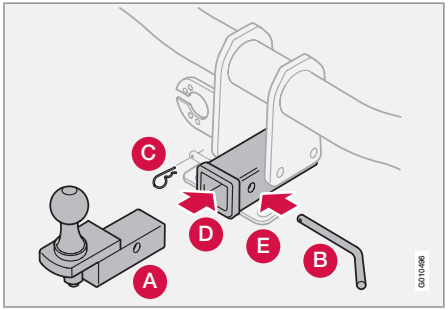

- A Ball holder
- B Locking bolt
- C Cotter pin
- D Hitch assembly
- E Safety wire attachment

Installing the ball holder

1. If necessary, remove the cotter pin from the locking bolt and slide the locking bolt out of the hitch assembly.
2. Slide the ball holder into the hitch assembly.
3. Align the hole in the ball holder with the one in the hitch assembly.
4. Slide the locking bolt through the hitch assembly/ball holder.
5. Insert the cotter pin in the hole at the end of the locking bolt.

Removing the ball holder

1. Remove the cotter pin from the locking bolt and slide the locking bolt out of the ball holder/hitch assembly.
2. Pull the ball holder out of the hitch assembly.

NOTE

A cover for the hitch assembly is also included in the kit.

Emergency towing

Towing eyelet

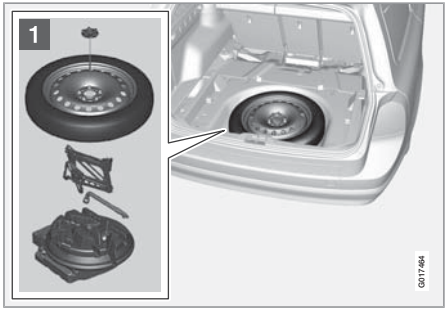

Location of the towing eyelet

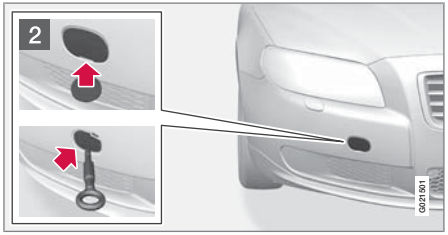

Attaching the towing eyelet

The towing eyelet is located under the floor of the cargo area, with the spare tire. This eyelet must be screwed into the positions provided on the right sides of either the front or rear bumper (see illustration).

CAUTION

If the vehicle is being towed on a flat bed truck, the towing eyelets must not be used to pull the vehicle up onto the flat bed.

NOTE

On certain models equipped with a trailer hitch, the towing eyelet cannot be screwed into the hole in the rear bumper. The towing rope should be attached to the trailer hitch instead. For this reason, the detachable section of the trailer hitch should be safely stowed in the vehicle at all times.

Attaching the towing eyelet

V70

1. Press the marked edge of the cover in the bumper and release it.
2. Fold away the cover and screw the towing eyelet in place, first by hand and then using the tire iron until it is securely in place.

XC70

1. Use a coin to pry open the lower edge of the cover.
2. Screw the towing eyelet in place, first by hand and then using the tire iron until it is securely in place.

After the vehicle has been towed, the eyelet should be removed and returned to its storage location.

Press the cover for the attachment point back into position.

WARNING

If the vehicle has no electrical current and must be towed, the power steering and brake systems will not function normally. It will still be possible to steer the vehicle and apply the brakes. However, keep in mind that greater effort will be required to turn the steering wheel and depress the brake pedal.

Precautions when the vehicle is in tow

- The steering wheel must be unlocked. The remote key must be in the ignition slot[1].
- Attach jumper cables (see page 105) to provide current for releasing the optional electric parking brake and to move the gear selector from the **P** position.
- The gear selector must be in position **N**.

[1] On vehicles with the optional keyless drive, the remote key must be in the passenger compartment.

- Maximum speed: 50 mph (80 km/h). Do not exceed the maximum allowable towing speed.
- Maximum distance with front wheels on ground: 50 miles (80 km).
- While the vehicle is being towed, try to keep the tow rope taut at all times.
- The vehicle should only be towed in the forward direction.

NOTE

During towing, ignition mode **II** should be used so that the lighting can be switched on.

CAUTION

Vehicles with AWD (All Wheel Drive) with the front wheels off the ground should not be towed at speeds about 50 mph (70 km/h) or for distances longer than 30 miles (50 km).

CAUTION

- Please check with state and local authorities before attempting this type of towing, as vehicles being towed are subject to regulations regarding maximum towing speed, length and type of towing device, lighting, etc.
- If the vehicle's battery is dead, do not attempt to start the vehicle by pushing or pulling it as this will damage the three-way catalytic converter(s). The engine must be jump started using an auxiliary battery (see page 105).
- If the vehicle is being towed on a flat bed truck, the towing eyelets must not be used to pull the vehicle up onto the flat bed or to secure the vehicle on the flat bed. Consult the tow truck operator.

Towing vehicles with front wheel drive/ All Wheel Drive

Volvo recommends the use of flat bed equipment.

- If wheel lift equipment must be used, please use extreme caution to help avoid damage to the vehicle. **In this case, the vehicle should be towed with the rear wheels on the ground if at all possible.**
- If it is absolutely necessary to tow the vehicle with the front wheels on the ground, please refer to the towing information on page 212.

CAUTION

- Sling-type equipment applied at the front will damage radiator and air conditioning lines.
- It is equally important not to use sling-type equipment at the rear or apply lifting equipment inside the rear wheels; serious damage to the rear axle may result.
- If the vehicle is being towed on a flat bed truck, the towing eyelets must not be used to secure the vehicle on the flat bed. Consult the tow truck operator.

Volvo maintenance..... 216
Maintaining your car..... 217
Hood and engine compartment..... 219
Engine oil..... 220
Fluids..... 222
Replacing bulbs..... 224
Wiper blades and washer fluid..... 231
Battery..... 233
Fuses..... 236
Wheels and tires..... 244
Vehicle care..... 261
Label information..... 266
Specifications..... 268
Volvo programs..... 276

G020922

MAINTENANCE AND SPECIFICATIONS

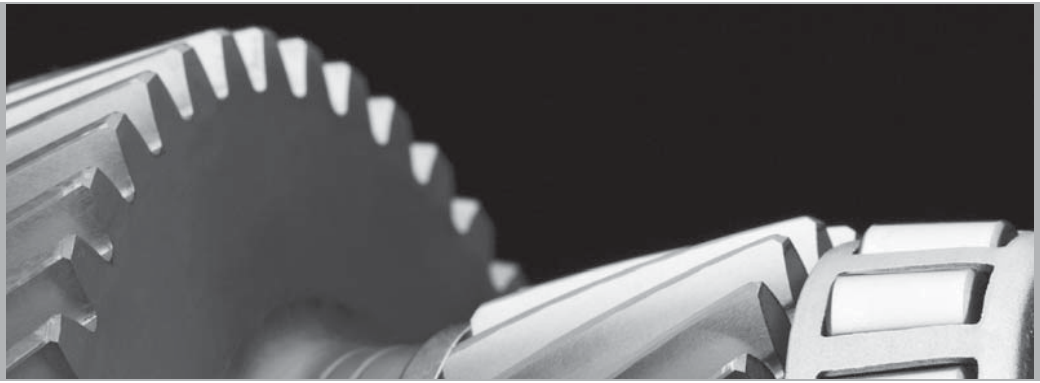

06

Volvo maintenance

Introduction

Volvo advises you to follow the maintenance program outlined in the Warranty and Service Records Information booklet. This maintenance program contains inspections and services necessary for the proper function of your vehicle. The maintenance services contain several checks that require special tools and training, and therefore must be performed by a qualified technician. To keep your Volvo in top condition, specify time-tested and proven Genuine Volvo Parts and Accessories.

The Federal Clean Air Act – U.S

The Federal Clean Air Act requires vehicle manufacturers to furnish written instructions to the ultimate purchaser to assure the proper servicing and function of the components that control emissions. These services, which are listed in the "Warranty and Service Records Information" booklet, are not covered by the warranty. You will be required to pay for labor and material used.

Maintenance

Your Volvo passed several major inspections before it was delivered to you, in accordance with Volvo specifications. The maintenance procedures outlined in the Warranty and Service Records Information booklet, many of which will positively affect your vehicle's emissions, should be performed as indicated. It is recommended that receipts for vehicle emission maintenance be retained in case questions arise concerning maintenance. Inspection and maintenance should also be performed anytime a malfunction is observed or suspected.

Applicable warranties – U.S/Canada

In accordance with applicable U.S. and Canadian regulations, the following list of warranties is provided.

- New Vehicle Limited Warranty
- Parts and Accessories Limited Warranty
- Corrosion Protection Limited Warranty
- Seat Belt and Supplemental Restraint Systems Limited Warranty
- Emission Design and Defect Warranty
- Emission Performance Warranty

These are the federal warranties; other warranties are provided as required by state/provincial law. Refer to your separate Warranty and Service Records Information booklet for detailed information concerning each of the warranties.

Periodic maintenance helps minimize emissions

Periodic maintenance will help keep your vehicle running well. Your Warranty and Service Records Information booklet provides a comprehensive periodic maintenance schedule up to 150,000 miles (240,000 km) of vehicle maintenance. The schedule includes components that affect vehicle emissions. This page describes some of the emission-related components.

Vehicle Event Data (Black Box)

Your vehicle's driving and safety systems employ computers that monitor, and share with each other, information about your vehicle's operation. One or more of these computers may store what they monitor, either during normal vehicle operation or in a crash or near-crash event. Stored information may be read and used by:

- Volvo Car Corporation
- service and repair facilities
- law enforcement or government agencies
- others who may assert a legal right to know, or who obtain your consent to know such information.

Owner maintenance

Periodic maintenance requirements and intervals are described in your vehicle's Warranty and Service Records Information booklet.

The following points can be carried out between the normally scheduled maintenance services.

Each time the car is refueled:

- Check the engine oil level.
- Clean the windshield, windshield wipers, headlights, and tail lights.

Monthly:

- Check cold tire pressure in all tires. Inspect the tires for wear.
- Check that engine coolant and other fluid levels are between the indicated "min" and "max" markings.
- Clean interior glass surfaces with a glass cleaner and soft paper towels.
- Wipe driver information displays with a soft cloth.
- Visually inspect battery terminals for corrosion. Corrosion may indicate a loose terminal connector, or a battery near the end of its useful service life. Consult your Volvo retailer for additional information.

As needed:

Wash the car, including the undercarriage, to reduce wear that can be caused by a buildup of dirt, and corrosion that can be caused by salt residues.

Clean leaves and twigs from air intake vents at the base of the windshield, and from other places where they may collect.

NOTE

Complete service information for qualified technicians is available online for purchase or subscription at www.volvotechinfo.com.

Emission inspection readiness

What is an Onboard Diagnostic System (OBD II)?

OBD II is part of your vehicle's computerized engine management system. It stores diagnostic information about your vehicle's emission controls. It can light the Check Engine light (MIL) if it detects an emission control "fault." A "fault" is a component or system that is not performing within an expected range. A fault may be permanent or temporary. OBD II will store a message about any fault.

How do states use OBD II for emission inspections?

Many states connect a computer directly to a vehicle's OBD II system. The inspector can then read "faults." In some states, this type of inspection has replaced the tailpipe emission test.

How can my vehicle fail OBD II emission inspection?

Your vehicle can fail OBD II emission inspection for any of the following reasons.

- If your Check Engine (MIL) light is lit, your vehicle may fail inspection.
- If your vehicle's Check Engine light was lit, but went out without any action on your part, OBD II will still have a recorded fault. Your vehicle may pass or fail, depending on the inspection practices in your area.
- If you had recent service that required disconnecting the battery, OBD II diagnostic information may be incomplete and "not ready" for inspection. A vehicle that is not ready may fail inspection.

How can I prepare for my next OBD II emission inspection?

- If your Check Engine (MIL) light is lit – or was lit but went out without service, have

Maintaining your car

your vehicle diagnosed and, if necessary, serviced by a qualified Volvo technician.

- If you recently had service for a lit Check Engine light, or if you had service that required disconnecting the battery, a period of driving is necessary to bring the OBD II system to "ready" for inspection. A half-hour trip of mixed stop-and-go/highway driving is typically needed to allow OBD II to reach readiness. Your Volvo retailer can provide you with more information on planning a trip.
- Maintain your vehicle in accordance with your vehicle's maintenance schedule.

Opening and closing the hood

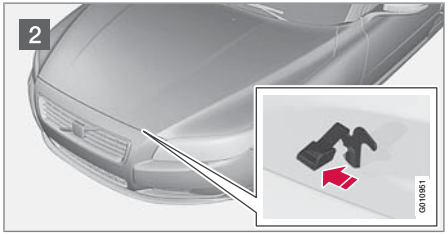

1 Pull the lever located under the left side of the dash to release the hood lock.

2 Lift the hood slightly. Press the release control (located under the right front edge of the hood) to the left, and lift the hood

WARNING

Check that the hood locks properly when closed.

Engine compartment, overview

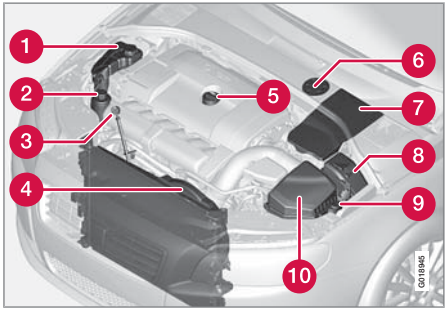

The appearance of the engine compartment may vary depending on engine model.

1. Coolant expansion tank
2. Power steering fluid reservoir
3. Engine oil dipstick
4. Radiator
5. Filler cap for engine oil
6. Cover over brake fluid reservoir
7. Battery
8. Relay and fuse box
9. Washer fluid reservoir
10. Air cleaner

WARNING

The cooling fan may start or continue to operate (for up to 6 minutes) after the engine has been switched off.

WARNING

The ignition should always be completely switched off before performing any operations in the engine compartment.

The distributor ignition system operates at very high voltages. Special safety precautions must be followed to prevent injury. Always turn the ignition off when:

- Replacing distributor ignition components e.g. plugs, coil, etc.
- Do not touch any part of the distributor ignition system while the engine is running. This may result in unintended movements and body injury.

Engine oil

Checking the engine oil

The oil level should be checked every time the vehicle is refueled. This is especially important during the period up to the first scheduled maintenance service.

- See page 272 for oil specifications.
- Refer to the Warranty and Service Records Information booklet for information on the oil change intervals.

Volvo recommends Castrol oil products.

CAUTION

- Not checking the oil level regularly can result in serious engine damage if the oil level becomes too low.
- Oil that is lower than the specified quality can damage the engine.
- Volvo does not recommend the use of oil additives.
- Always add oil of the same type and viscosity as already used.
- Never fill oil above the **MAX** mark. This could cause an increase in oil consumption.

Checking and adding oil

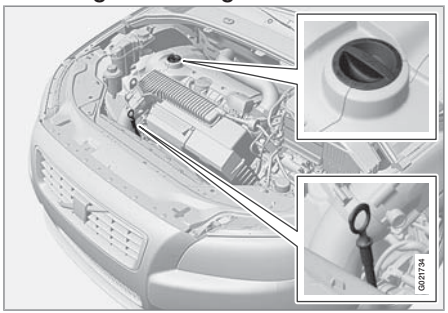

Location of the filler cap and dipstick

NOTE

Before checking the oil:

- The car should be parked on a level surface when the oil is checked.
- **If the engine is warm**, wait for at least 10 – 15 minutes after the engine has been switched off before checking the oil.

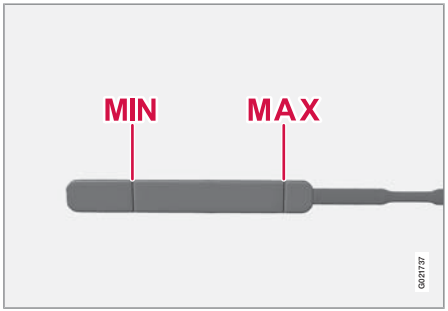

*The oil level must be between the **MIN** and **MAX** marks on the dipstick*

Checking the oil

1. Pull out the dipstick and wipe it with a lint-free rag.
2. Reinsert the dipstick, pull it out, and check the oil level. The level must be between the **MIN** and **MAX** marks.
3. Add oil if necessary. If the level is close to the **MIN** mark, add approximately 0.5 US quarts (0.5 liters) of oil.
4. Recheck the level and add more oil if necessary until the level is near the **MAX** mark.

Engine oil

WARNING

Do not allow oil to spill onto or come into contact with hot exhaust pipe surfaces.

NOTE

Synthetic oil is not used when the oil is changed at the normal maintenance intervals except at owner request and at additional charge. Please consult your Volvo retailer.

Fluids

Coolant

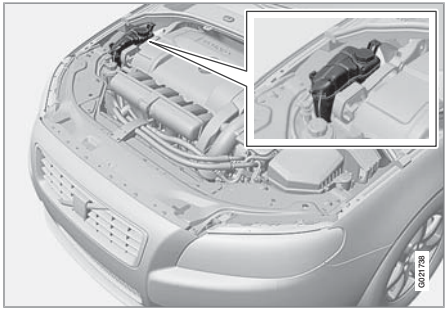

Location of the coolant reservoir

Normally, the coolant does not need to be changed. If the system must be drained, consult a trained and qualified Volvo service technician.

See page 274 for information on cooling system capacities.

CAUTION

- If necessary, top up the cooling system with Volvo Genuine Coolant/Antifreeze only (a 50/50 mix of water and anti-freeze).
- Different types of antifreeze/coolant may not be mixed.
- If the cooling system is drained, it should be flushed with clean water or premixed anti-freeze before it is refilled with the correct mixture of water/anti-freeze.
- The cooling system must always be kept filled to the correct level, and the level must be between the **MIN** and **MAX** marks. If it is not kept filled, there can be high local temperatures in the engine which could result in damage. Check coolant regularly!
- Do not top up with water only. This reduces the rust-protective and anti-freeze qualities of the coolant and has a lower boiling point. It can also cause damage to the cooling system if it should freeze.
- Do not use chlorinated tap water in the vehicles cooling system.

WARNING

- Never remove the radiator cap while the engine is warm. Wait until the vehicle cools.
- If it is necessary to top off the coolant when the engine is warm, unscrew the expansion tank cap slowly so that the overpressure dissipates.

Brake fluid

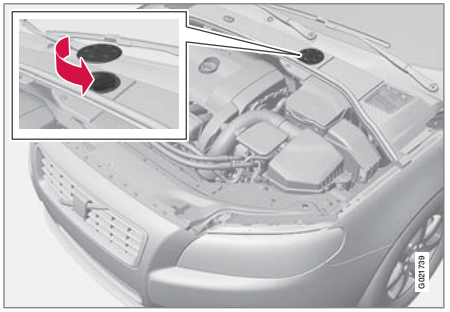

Location of the brake fluid reservoir

Checking the level

The fluid reservoir is concealed under the round cover at the rear of the engine compartment. The round cover must be removed first before the reservoir cap can be accessed.

The brake fluid should always be between the **MIN** and **MAX** marks on the inside of the reservoir. Check, without removing the cap, that there is sufficient fluid in the reservoir.

Fluid type: DOT 4+ boiling point >536 °F

(280 °C), P/N 9437433

Replace: The fluid should be replaced according to the intervals specified in the Warranty and Service Records Information booklet.

When driving under extremely hard conditions (mountain driving, etc), it may be necessary to replace the fluid more often. Consult a trained and qualified Volvo service technician.

Always entrust brake fluid changing to a trained and qualified Volvo service technician.

WARNING

If the fluid level is below the **MIN** mark in the reservoir or if a brake-related message is shown in the information display: **DO NOT DRIVE**. Have the car towed to a trained and qualified Volvo service technician and have the brake system inspected.

Filling

1. Turn and open the cover.
2. Unscrew the reservoir cap and fill the fluid. The level must be between the **MIN** and **MAX** marks.

Power steering fluid

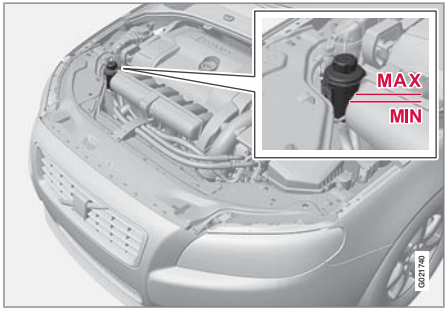

Check the level frequently. The fluid does not require changing. The fluid level must be between the **MIN** and **MAX** marks. For capacities and recommended fluid grade, see page 274.

WARNING

If a problem should occur in the power steering system or if the vehicle has no electrical current and must be towed, it is still possible to steer the vehicle. However, keep in mind that greater effort will be required to turn the steering wheel.

CAUTION

Keep the area around the power steering fluid reservoir clean when checking.

Replacing bulbs

Introduction

All bulb specifications are listed on page 230. The following bulbs should only be replaced by a trained and qualified Volvo service technician:

- Dome lighting
- Reading lights
- Glove compartment lighting
- Turn signals in the door mirror
- Approach lighting in the door mirror
- Brake/fog/taillights
- Rear side parking lights
- Active Bi-Xenon® and LED bulbs

NOTE

For information regarding any other bulbs not mentioned in this section, please contact your Volvo retailer or a trained and authorized Volvo service technician.

WARNING

- Active Bi-Xenon® headlights (option) – due to the high voltage used by these headlights, these bulbs should only be replaced by a trained and qualified Volvo service technician.
- Turn off the lights and remove the remote key from the ignition before changing any bulbs.

Headlight housing

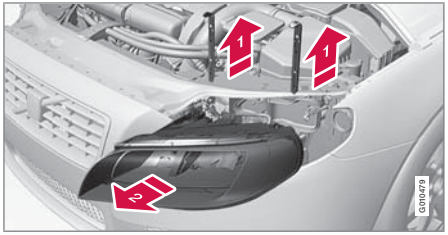

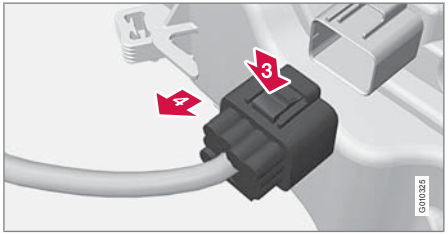

WARNING

- The engine should not be running when changing bulbs.
- When changing in the headlight housing, if the engine has been running just prior to replacing bulbs, please be aware that components in the engine compartment will be hot.

The entire headlight housing must be lifted out when replacing all front bulbs (except for the fog lights).

CAUTION

Never touch the glass of bulbs with your fingers. Grease and oils from your fingers vaporize in the heat and will leave a deposit on the reflector, which will damage it.

NOTE

- Always switch off the ignition before starting to replace a bulb.
- The optional active Bi-Xenon® headlight bulbs contain trace amounts of mercury. These bulbs should always be disposed of by a trained and qualified Volvo service technician.

Removing the headlight housing

1. Switch off the ignition by pressing quickly on the **START/STOP ENGINE** button and remove the remote key from the ignition slot[1].
2. (Upper illustration under "Headlight housing")

   1 Withdraw the headlight housing's locking pins.

   2 Pull the headlight housing straight out .

CAUTION

When disconnecting the connector, pull on the connector itself and not on the wiring.

3. (Lower illustration under "Headlight housing")

   3 Unplug the wiring connector by holding down the clip with your thumb.

   4 Pull out the connector with the other hand.
4. Lift out the housing and place it on a soft surface to avoid scratching the lens.
5. Replace the defective bulb(s), see page 230.

Reinserting the headlight housing

1. Plug in the connector until it clicks into place.
2. Reinstall the headlight housing and locking pins. Check that they are correctly inserted. The headlight housing must be properly inserted and secured in place before the lighting is switched on or the remote key is inserted into the ignition slot.
3. Check that the lights function properly.

Removing the cover to access the headlights and parking lights

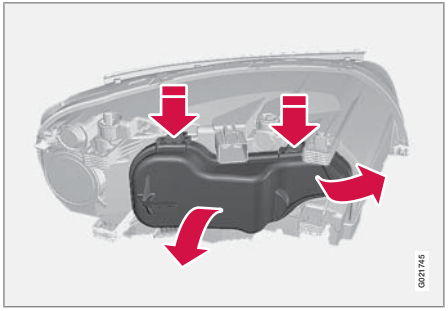

NOTE

Before starting to replace a bulb, see page 224.

1. Open the retaining clamp by pressing it to the side.
2. Press down the clips on the upper edge of the cover and remove it.

Reinstall the cover in the reverse order.

[1] Does not apply to vehicles with the optional keyless drive.

Replacing bulbs

Low beam, Halogen

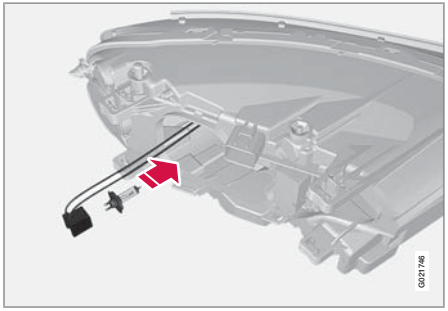

1. Remove the headlight housing from the vehicle (see page 224).
2. Remove the cover over the bulbs.
3. Detach the bulb by pressing the upper section of the retaining spring downward and to the side.
4. Unplug the connector from the bulb.
5. Replace the bulb and reinsert it into the headlight housing.
6. Put the cover back into position and reinstall the headlight housing.

High beam, Halogen

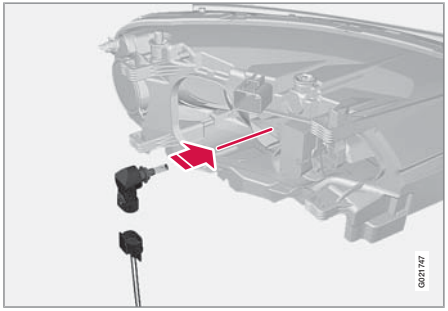

1. Remove the headlight housing from the vehicle (see page 224).
2. Remove the cover over the bulbs (see page 225).
3. Pull the bulb holder out of the headlight housing.
4. Pull the defective bulb out of the socket.
5. Press the new bulb into the socket until it snaps into place. It can only be secured in one position.
6. Return the bulb holder into position in the headlight housing.
7. Put the cover back into position and reinstall the headlight housing.

Extra high beam[2]

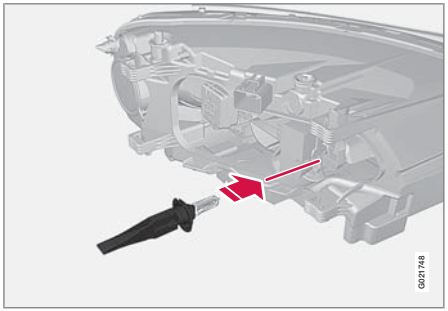

1. Remove the headlight housing from the vehicle (see page 224).
2. Remove the cover over the bulbs (see page 225).
3. Remove the bulb by pressing the holder downward.
4. Remove the connector from the bulb.
5. Insert a new bulb in the connector until it snaps in place. It can only be inserted in one way.
6. Return the bulb holder into position in the headlight housing.
7. Put the cover back into position and reinstall the headlight housing.

[2] Models with optional Active Bi-Xenon® headlights only.

Replacing bulbs

Parking lights

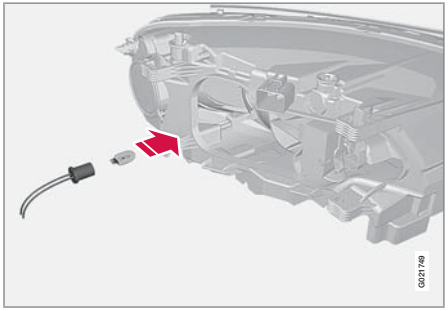

1. Remove the headlight housing from the vehicle (see page 224).
2. Remove the cover over the bulbs (see page 225).
3. To access the bulb, first remove the high beam bulb.
4. Pull the wire to withdraw the bulb holder.
5. Remove the burned out bulb and install a new one. It can only be secured in one position.
6. Press the bulb holder into the socket and press until it clicks into place.
7. Put the cover back into position and reinstall the headlight housing.

Turn signals

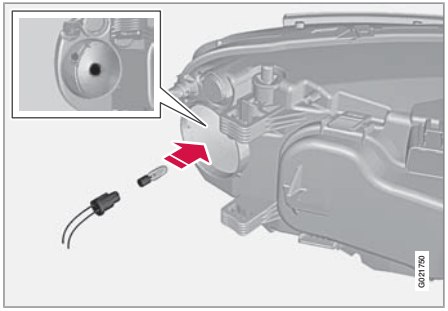

1. Remove the headlight housing from the vehicle (see page 224).
2. Remove the round cover by pulling the tab until the cover comes off.
3. Pull out the holder to access the bulb.
4. Remove the burned out bulb by pressing it in slightly and turning out before pulling it out. Press a new bulb into the socket.
5. Press the bulb holder into the socket and press until it clicks into place.
6. Press the cover until it clicks into position.
7. Reinstall the headlight housing.

Side marker lights

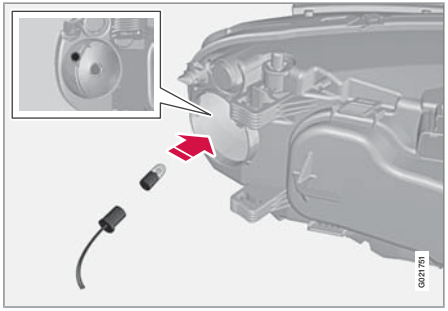

NOTE

Before starting to replace a bulb, see page 224.

1. Remove the headlight housing from the vehicle (see page 224).
2. Remove the round cover.
3. Pull the wire to withdraw the bulb holder.
4. Pull out the burned out bulb and install a new one. It can only be secured in one position.
5. Press the bulb holder into the socket and press until it clicks into place.
6. Press the cover until it clicks into position.

Replacing bulbs

Fog lights

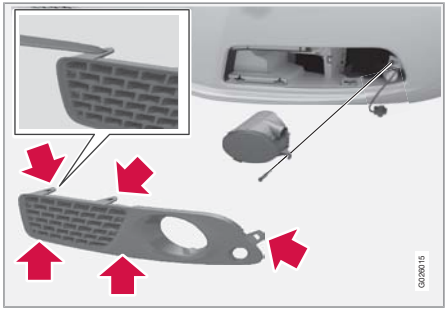

1. Remove the cover by pressing in the clips and pulling straight out.
2. Unscrew the fog light housing screw and pull it out.
3. Turn the bulb counterclockwise and remove it.
4. Install a new bulb by turning clockwise.
5. Press the bulb into the holder. (The profile of the bulb holder corresponds to the profile of the foot of the bulb.)
6. Reinstall the bulb holder. The **TOP** mark on the bulb holder must always be upward.
7. Put the cover back into place.

Taillight housing, turn signal

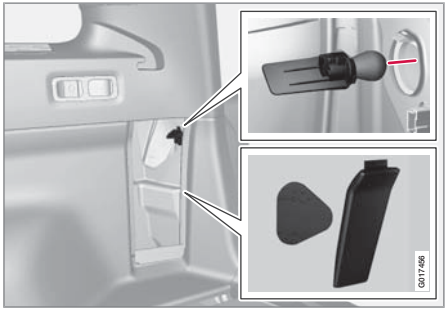

The bulbs in the taillight cluster are replaced from inside the cargo area (not the LED functions).

NOTE

Before starting to replace a bulb, see page 224.

1. Open the panel.
2. Remove the insulation by pulling straight out.
3. Remove the entire bulb unit by turning its handle counterclockwise.
4. Remove the bulb by pulling it straight out.

Replace the bulb in the reverse order.

Location of taillight bulbs

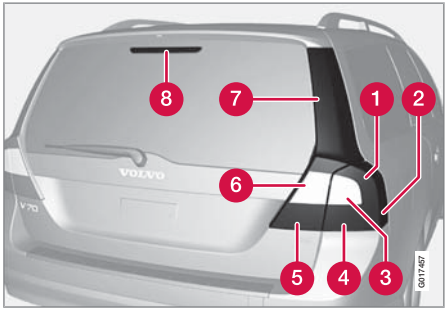

Taillight lens, right side

1. Parking/brake lights (LED)
2. Side maker lights (LED)
3. Turn signal
4. Reflector
5. Rear fog light (driver's side only)
6. Backup light
7. Brake lights (LED)
8. High-mounted brake lights (LED)

NOTE

If an error message remains in the display after a faulty bulb has been replaced, contact an authorized Volvo workshop.

License plate lighting

1. Remove the screws with a screwdriver.
2. Carefully detach the entire bulb housing and pull it out.
3. Replace the bulb.
4. Refit the entire bulb housing and screw it into place.

Footwell lighting

1. Insert a screwdriver at the short end of the lens closest to the tunnel console (the center of the vehicle) and turn gently so that the lens comes loose. (Applies to both lights).
2. Turn carefully until the lens comes loose.
3. Replace the bulb.
4. Press the lens back into place.

Cargo area lighting

NOTE

Before starting to replace a bulb, see page 224.

1. Insert a screwdriver and gently turn so that the bulb housing comes loose.
2. Replace the bulb.
3. Check that the bulb illuminates and press it back into the bulb housing.

Replacing bulbs

Vanity mirror lighting

Removing the mirror glass

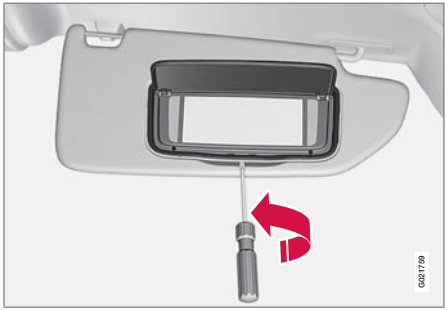

1. Insert a screwdriver underneath the lower edge, in the center, turn and carefully pry up the lug on the edge.
2. Insert the screwdriver underneath the edge on the left and right sides (by the black rubber sections), and pry carefully so that the glass comes loose in the lower edge.
3. Carefully detach and lift aside the entire mirror glass and cover.
4. Replace the bulb.

Reinstalling the mirror glass

1. Press the three lugs at top edge of the mirror glass back into position.
2. Press the three lower lugs back into position.

Specification, bulbs

Lighting function	Output/voltage (W/V)	Bulb
Active Bi-Xenon® (extra high beam)	55	H7
Low beam (halogen)	55	H7
High beam (halogen)	65	H9
Rear turn signals	21	PY21W
Front turn signals	21	H21W
Front fog lights	35	H8
Footwell lighting, cargo area lighting, license plate lighting	5	Festoon bulb SV5.5
Vanity mirror	1.2	Festoon bulb SV5.5
Front parking lights	5	W5W
Front side marker lights	5	W5W
Glove compartment lighting	5	Festoon bulb SV8.5

Wiper blades

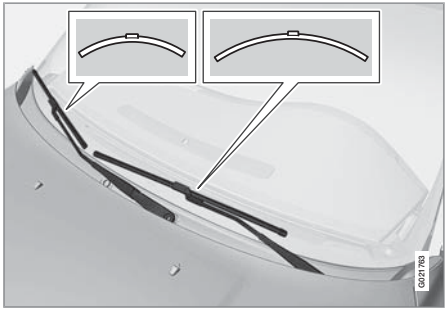

The windshield wiper blades are different lengths. The blade on the driver's side is longer than the one on the passenger side.

Service position

The wiper blades must be in the service (vertical) position for replacement or washing.

1. Switch off the ignition (ignition mode **0**, see page 77) and keep the remote key in the ignition slot[1].
2. Move the right steering wheel lever up and hold it for at least 1 second. The wipers will then move to the vertical position on the windshield.

The wipers will return to the normal position when the vehicle is started.

Replacing the windshield wiper blades

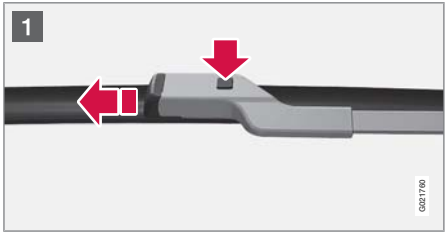

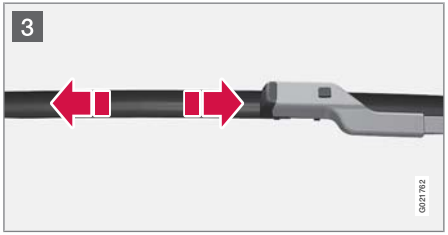

1. With the wipers in the service position, fold out the wiper arm from the windshield. Press the button on the wiper blade attachment and pull the wiper blade straight out, parallel with the wiper arm.
2. Slide in the new wiper blade until it clicks into place.
3. Check that the blade is securely in place.

Cleaning

Keeping the windshield and wiper blades clean helps improve visibility and prolongs the service life of the wiper blades. Clean the wiper blades with a stiff-bristle brush and lukewarm soap solution or car washing detergent.

[1] Does not apply to vehicles with the optional keyless drive.

Wiper blades and washer fluid

Replacing the tailgate wiper blade

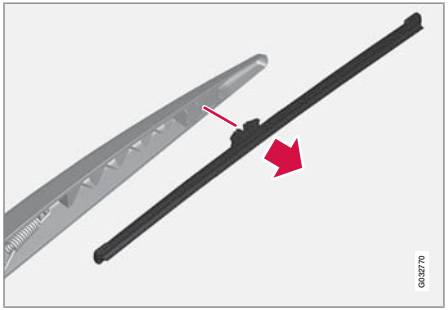

1. Fold the wiper arm outward.
2. Grasp the inner section of wiper blade (at the arrow).
3. Pull out the blade to release it from the wiper arm.
4. Press the new wiper blade into place and check that it seats securely.
5. Fold the wiper arm back toward the tailgate window.

Filling washer fluid

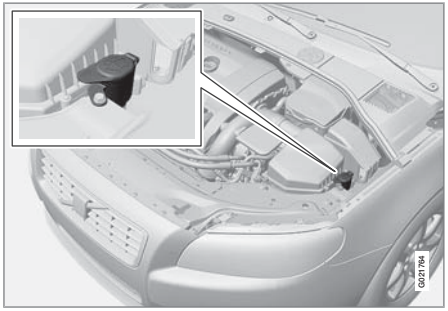

Location of the washer fluid reservoir

The windshield and headlight washers share a common reservoir.

The washer fluid reservoir is located on the driver's side of the engine compartment. During cold weather, the reservoir should be filled with windshield washer solvent containing antifreeze. For capacities, see page 274.

Warning symbols on the battery

	Wear protective goggles.
	Keep away from children.
	Avoid smoking, open flames, and/or sparks.
	See the owner's manual.
	Contains corrosive acid.
	Risk of explosion

NOTE

A used battery should be disposed of in an environmentally responsible manner. Consult your Volvo retailer or take the battery to a recycling station.

Handling

- Check that the battery cables are correctly connected and tightened.
- Never disconnect the battery when the engine is running (for example, when replacing the battery).

The service life and function of the battery is influenced by factors such as the number of starts, discharging, driving style, driving conditions, climatic conditions etc.

Never use a quick charger to charge the battery.

WARNING

- Never expose the battery to open flame or electric spark.
- Do not smoke near the battery.
- Battery fluid contains sulfuric acid. Do not allow battery fluid to contact eyes, skin, fabrics or painted surfaces. If contact occurs, flush the affected area immediately with water. Obtain medical help immediately if eyes are affected.

NOTE

The life of the battery is shortened if it becomes discharged repeatedly.

Maintenance

- Regularly check that the electrolyte level is correct and never fill above the level mark.
- Check all cells. Use a large screwdriver or a coin to remove the cell caps. Each cell has its own maximum and minimum level mark.
- If necessary, top up with distilled water to the battery's maximum mark.
- Tighten the cell caps thoroughly.

Battery

CAUTION

- Always use distilled or deionized water (battery water).
- Never fill above the level mark in the cell.

Changing

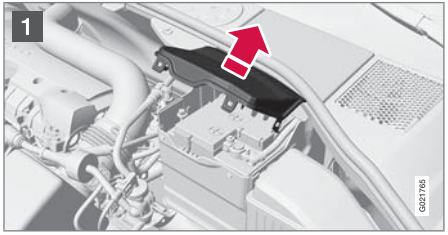

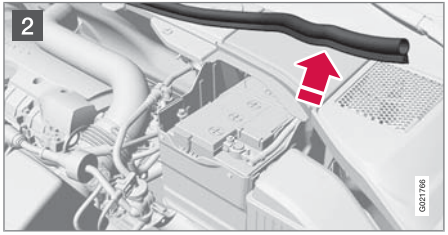

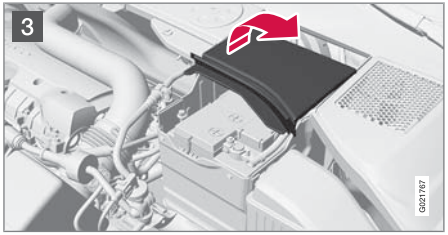

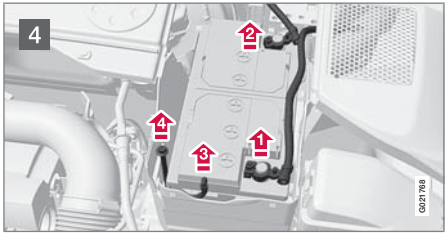

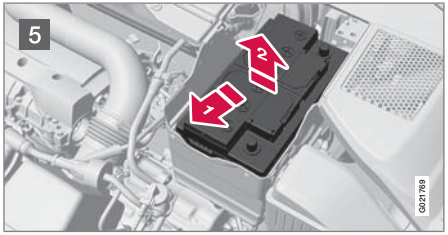

WARNING

Connect and disconnect the positive and negative cables in the correct sequence.

Removal

Switch off the ignition and wait at least 5 minutes before disconnecting the battery so that all information in the vehicle's electrical system can be stored in the control modules.

1. Open the clips on the front cover and remove the cover.
2. Release the rubber moulding so that the rear cover is free.
3. Remove the rear cover by pulling it away.
4. 1 Detach the black negative cable.
   2 Detach the red positive cable
   3 Detach the ventilation hose from the battery
   4 Loosen the screw holding the battery clamp.
5. Move the battery to the side and lift it up.

WARNING

PROPOSITION 65 WARNING!

Battery posts, terminals, and related accessories contain lead and lead compounds, chemicals known to the state of California to cause cancer and reproductive harm. Wash hands after handling.

Installation

1. Lower the battery into the battery box.

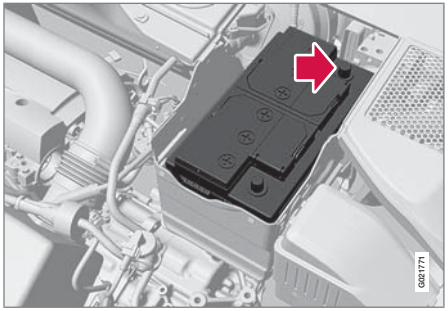

2. Move the battery inward and to the side until it reaches the rear edge of the box.
3. Screw in the battery with the screw in the clamp.
4. Connect the ventilation hose.
5. Connect the red positive cable.
6. Connect the black negative cable.
7. Press in the rear cover. (See Removal).
8. Reinstall the cold section moulding. (See Removal).
9. Reinstall the front cover and secure it with the clips. (See Removal).

Fuses

Replacing fuses

There are relay/fuse boxes located in the engine compartment, the passenger compartment, and the cargo area.

If an electrical component fails to function, this may be due to a blown fuse. The easiest way to see if a fuse is blown is to remove it.

To do so:

1. Pull the fuse straight out. If a fuse is difficult to remove, special fuse removal tools are located on the inside of the fuse box covers.
2. From the side, examine the curved metal wire in the fuse to see if it is intact.

If the wire is broken, insert a new fuse of the same color and amperage (written on the fuse).

If fuses burn out repeatedly, have the electrical system inspected by a trained and qualified Volvo service technician.

WARNING

Never use metal objects or fuses with higher amperage than those stated on the following pages. Doing so could seriously damage or overload the vehicle's electrical system.

Location of the fuse boxes

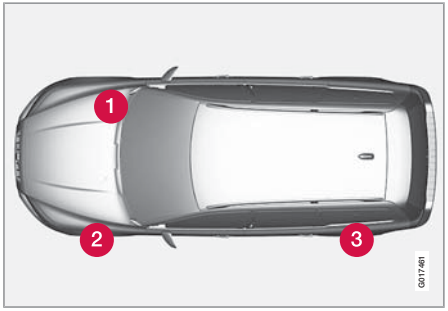

1. Under the glove compartment
2. Engine compartment
3. Cargo area

Fuses

Engine compartment

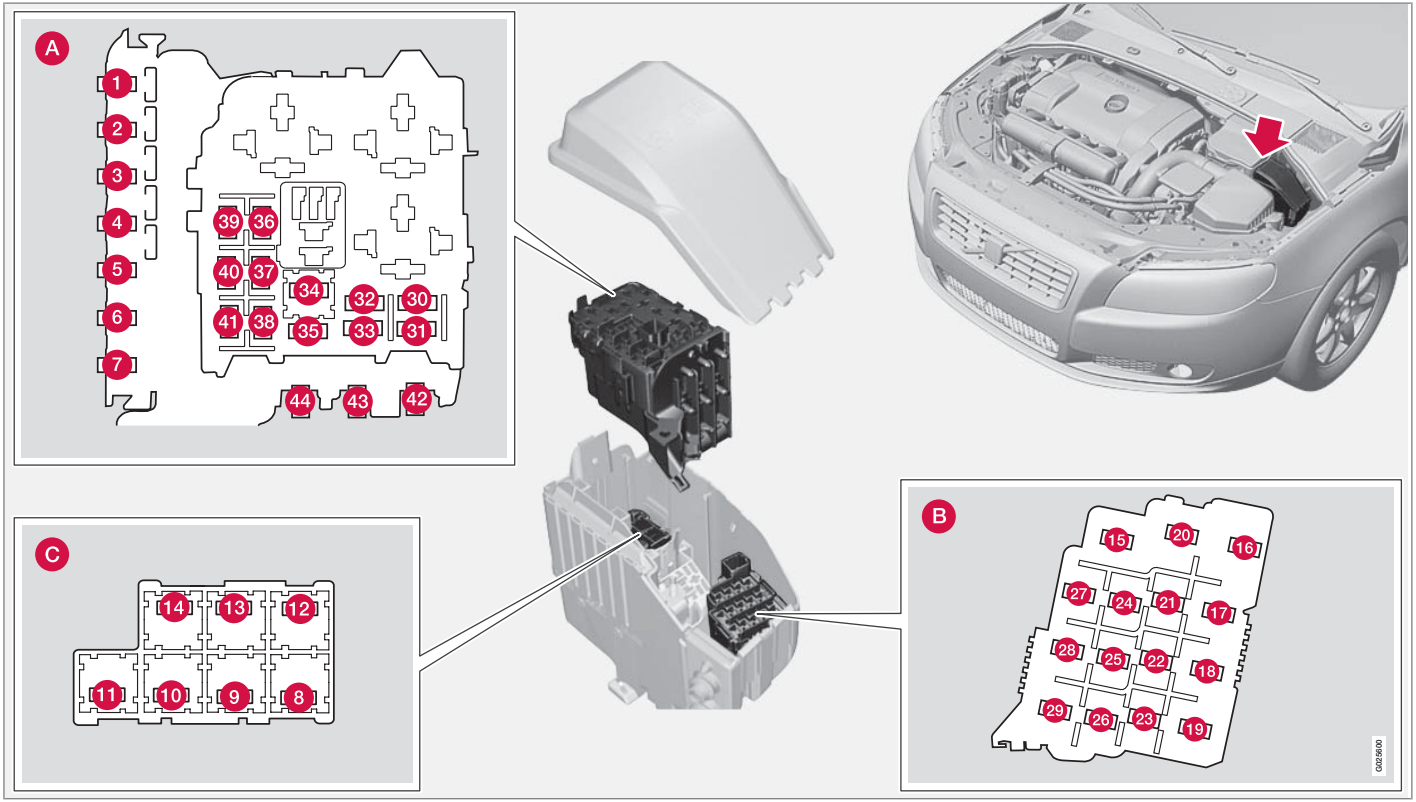

Fuses

A Engine compartment, upper

B Engine compartment, front

C Engine compartment, lower

Positions

These fuses are all located in the engine compartment box. Fuses in C are located under A.

NOTE

- Fuses 16 – 33 and 35 – 41 may be changed at any time when necessary.
- Fuses 1 – 15, 34 and 42 – 44 are relays/circuit breakers and should only be removed or replaced by a trained and qualified Volvo service technician.
- There is a special fuse removal tool on the underside of the cover.

	Function	A
1	Circuit breaker	50
2	Circuit breaker	50
3	Circuit breaker	60
4	Circuit breaker	60
5	Circuit breaker	50
6	–	
7	–	
8	–	
9	Windshield wipers	30
10	–	
11	Climate system blower	40
12	–	
13	ABS pump	40
14	ABS valves	20
15	–	
16	Active Bi-Xenon® Lights. Headlight leveling (option)	10
17	Central electrical module	20
18	Radar. ACC control module (option)	5
19	Speed related power steering	5
20	Engine Control Module (ECM), transmission, SRS	10
21	Heated washer nozzles	10
22	Vacuum pump I5T	20
23	Lighting panel	5
24	Headlight washers	15
25	12-volt socket, front and rear seat	15
26	Moonroof (option), ceiling console/ECC (option)	10
27	Engine compartment box	5
28	Auxiliary lights (option)	20
29	Horn	15
30	Engine Control Module (ECM)	10
31	Control module, automatic transmission	15
32	Compressor A/C	15
33	Coils	5

Fuses

	Function	A
34	Starter motor relay	30
35	Ignition coils	20
36	Engine Control Module (ECM), throttle	10
37	Injection system	15
38	Engine valves	10
39	EVAP/heated oxygen sensor/ Injection	15
40	Crank case ventilation heater	20
41	Fuel leakage detection	5
42	–	
43	-	
44	Cooling fan	80

Fuses

Under the glove compartment

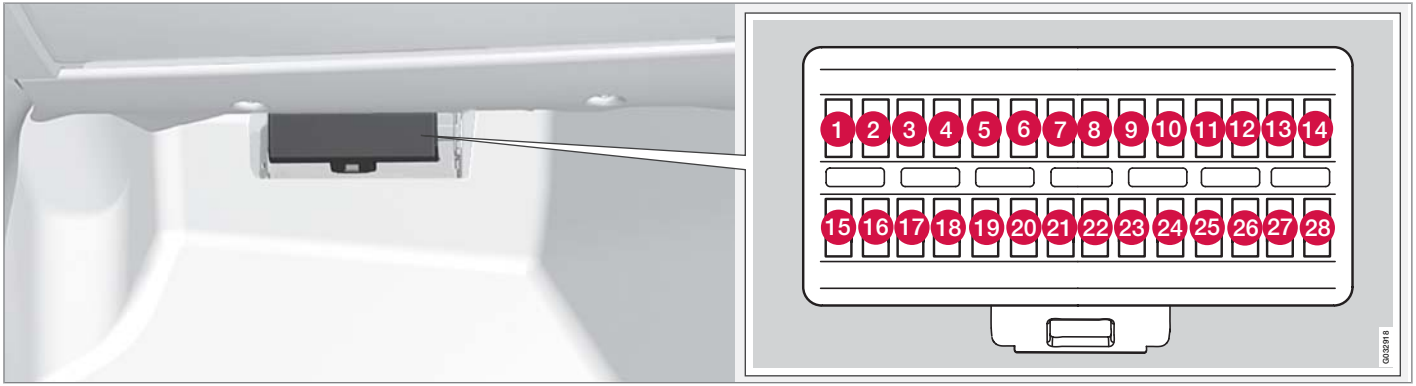

Fold aside the iupholstery covering the fuse box.

1. Press the cover's lock and fold it up.
2. The fuses are accessible.

Positions

	Function	A
1	Rain sensor (option)	5
2	SRS system	10
3	ABS brakes. Electric parking brake	5
4	Accelerator pedal, heated seats (option)	7.5
5	–	
6	ICM display, CD & Radio	15
7	Steering wheel module	7.5
8	–	
9	High beam	15
10	Moonroof (option)	20
11	Backup lights	7.5
12	–	
13	Front fog light (option)	15
14	Windshield washers	15
15	Adaptive cruise control ACC (option)	10

Fuses

	Function	A
16	–	
17	Overhead courtesy lighting, Control panel driver's door/ Power passenger seat (option)	7.5
18	Information display	5
19	Power driver's seat (option)	5
20	Tailgate wiper	15
21	Remote key receiver, Alarm sensors	5
22	Fuel pump	20
23	Electric steering column lock	20
24	–	
25	Lock, tank/tailgate	10
26	Alarm siren. ECC	5
27	START/STOP ENGINE button	5
28	Brake light switch	5

Fuses

Cargo area

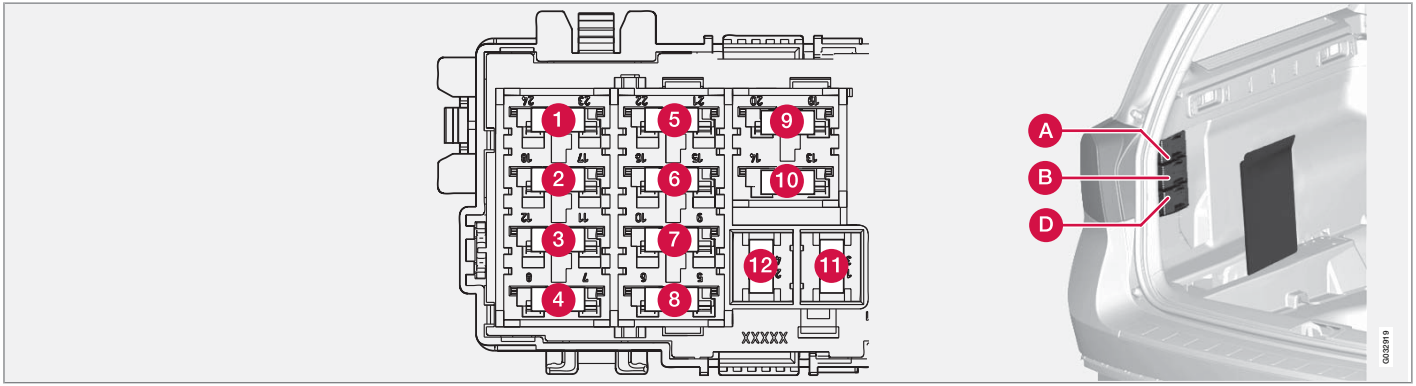

Located behind the upholstery on the left side of the cargo area

Positions

	Module A (black). Function	A
1	Switches in driver's door	25
2	Switches in passenger's door	25
3	Switches in rear door, driver's side	25
4	Switches in rear door, passenger's side	25
5	–	
6	12-V socket in cargo area, cooler (option)	15
7	Rear window defroster	30
8	-	
9	Trailer socket 2 (option)	15
10	Power driver's seat (option)	25
11	Trailer socket 1 (option)	40
12	Power tailgate (option)	30

Fuses

	Module B (white). Function	A
1	–	
2	Control module Four C (option)	15
3	Heated driver's seat (option)	15
4	Heated passenger's seat (option)	15
5	Rear seat heater, passenger's side (option)	15
6	AWD control module	10
7	Rear seat heater, driver's side (option)	15
8	–	
9	Power passenger's seat (option)	25
10	Keyless drive (option)	20
11	Electric parking brake – driver's side (option)	30
12	Electric parking brake – passenger's side (option)	30

	Module D (blue). Function	A
1	Navigation system display (option)	10
2	–	
3	Subwoofer (option)	25
4	SIRIUS satellite radio (option)	5
5	Audio amplifier (option)	25
6	Audio system	15
7	–	
	Reserve 8 – 12	

Wheels and tires

Introduction

Your vehicle is equipped with tires according to the vehicle's tire information placard on the B-pillar (the structural member at the side of the vehicle, at the rear of the driver's door opening).

The tires have good road holding characteristics and offer good handling on dry and wet surfaces. It should be noted however that the tires have been developed to give these features on snow/ice-free surfaces.

Certain models are equipped with "all-season" tires, which provide a somewhat higher degree of road holding on slippery surfaces than tires without the "all-season" rating. However, for optimum road holding on icy or snow-covered roads, we recommend suitable winter tires on all four wheels.

CAUTION

Some Volvo models are equipped with an Ultra High Performance tire and wheel combination designed to provide maximum dry pavement performance with consideration for hydroplaning resistance. As such, they may be more susceptible to road hazard damage and, depending on driving conditions, may achieve a tread life of less than 20,000 miles (30,000 km). Even if this vehicle is equipped with Volvo's advanced AWD or DSTC system, these tires are not designed for winter driving, and should be replaced with winter tires when weather conditions dictate.

When replacing tires, be sure that the new tires are the same size designation, type (radial) and preferably from the same manufacturer, on all four wheels. Otherwise there is a risk of altering the car's roadholding and handling characteristics.

Storing wheels and tires

When storing complete wheels (tires mounted on rims), they should be suspended off the floor or placed on their sides on the floor.

Tires not mounted on rims should be stored on their sides or standing upright, but should not be suspended.

CAUTION

Tires should preferably be stored in a cool, dry, dark place, and should never be stored in close proximity to solvents, gasoline, oils, etc.

Tread wear indicator

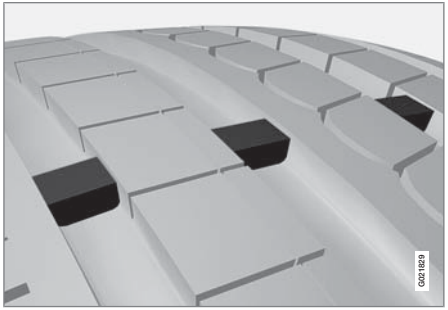

Tread wear indicator

The tires have wear indicator strips running across or parallel to the tread. The letters TWI are printed on the side of the tire. When approximately 1/16 " (1.6 mm) is left on the tread, these strips become visible and indicate that the tire should be replaced. Tires with less than 1/16 " (1.6 mm) tread offer very poor traction.

When replacing worn tires, it is recommended that the tire be identical in type (radial) and size as the one being replaced. Using a tire of the same make (manufacturer) will prevent alteration of the driving characteristics of the vehicle.

WARNING

- The wheel and tire sizes for your Volvo are specified to meet stringent stability and handling requirements. Unapproved wheel/tire size combinations can negatively affect your vehicle's stability and handling. Approved tire sizes are shown in the Tire inflation pressure tables.
- Any damage caused by installation of unapproved wheel/tire size combinations will not be covered by your new vehicle warranty. Volvo assumes no responsibility for death, injury, or expenses that may result from such installations.

New tires

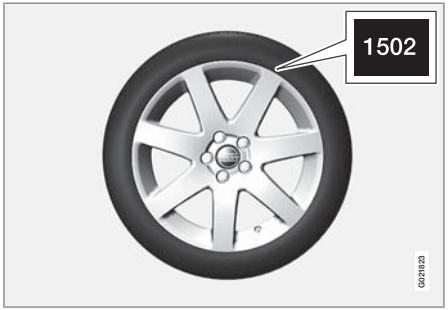

Remember that tires are perishable goods. As of 2000, the manufacturing week and year (Department of Transportation (DOT) stamp) will be indicated with 4 digits (e.g. 1502 means that the tire illustrated was manufactured during week 15 of 2002).

Tire age

- Tires degrade over time, even when they are not being used. It is recommended that tires generally be replaced after 6 years of normal service. Heat caused by hot climates, frequent high loading conditions or Ultra Violet (U.V.) exposure can accelerate the aging process.
- You should replace the spare tire when you replace the other road tires due to the aging of the spare.
- A tire's age can be determined by the DOT stamp on the sidewall (see the illustration).
- A tire with e.g., visible cracks or discoloration should be replaced immediately.

Improving tire economy

- Maintain correct tire pressure. See the tire pressure tables on pages 248 and 249.
- Drive smoothly: avoid fast starts, hard braking and tire screeching.
- Tire wear increases with speed.
- Correct front wheel alignment is very important.
- Unbalanced wheels impair tire economy and driving comfort.
- Tires must maintain the same direction of rotation throughout their lifetime.
- When replacing tires, the tires with the most tread should be mounted on the rear wheels to reduce the chance of oversteer during hard braking.
- Hitting curbs or potholes can damage the tires and/or wheels permanently.

Wheels and tires

Tire inflation

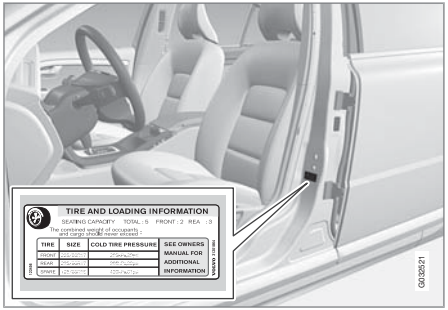

Tire inflation placard on U.S. models

Tire inflation

Check tire inflation pressure regularly.

Tables listing the recommended inflation pressure for your vehicle can be found on pages 248 and 249. A tire inflation pressure placard is also located on the driver's side B-pillar (the structural member at the side of the vehicle, at the rear of the driver's door opening). This placard indicates the designation of the factory-mounted tires on your vehicle, as well as load limits and inflation pressure.

NOTE

- The placards shown indicate inflation pressure for the tires installed on the vehicle at the factory only.
- A certain amount of air seepage from the tires occurs naturally and tire pressure fluctuates with seasonal changes in temperature. Always check tire pressure regularly.

- Use a tire gauge to check the tire inflation pressure, including the spare, at least once a month and before long trips. You are strongly urged to buy a reliable tire pressure gauge, as automatic service station gauges may be inaccurate.
- Use the recommended cold inflation pressure for optimum tire performance and wear.
- Under-inflation or over-inflation may cause uneven treadwear patterns.

NOTE

A certain amount of air seepage from the tires occurs naturally and tire pressure fluctuates with seasonal changes in temperature. Always check tire pressure regularly.

WARNING

- Under-inflation is the most common cause of tire failure and may result in severe tire cracking, tread separation, or "blow-out," with unexpected loss of vehicle control and increased risk of injury.
- Under-inflated tires reduce the load carrying capacity of your vehicle.

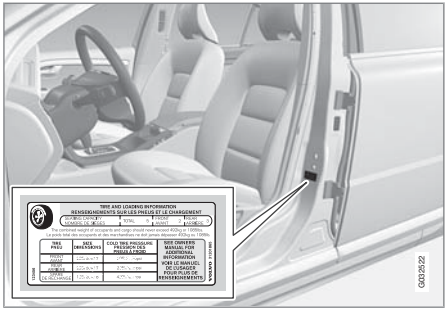

Tire inflation placard on Canadian models

When weather temperature changes occur, tire inflation pressures also change. A 10-degree temperature drop causes a corresponding drop of 1 psi (7 kPa) in inflation pressure. Check your tire pressures frequently and adjust them to the proper pressure, which can be found on

the vehicle's tire information placard or certification label.

Checking tire pressure

Cold tires

Inflation pressure should be checked when the tires are cold.

The tires are considered to be cold when they have the same temperature as the surrounding (ambient) air.

This temperature is normally reached after the vehicle has been parked for at least 3 hours.

After driving a distance of approximately 1 mile (1.6 km), the tires are considered to be hot. If you have to drive farther than this distance to pump your tire(s), check and record the tire pressure first and add the appropriate air pressure when you get to the pump.

If checking tire pressure when the tire is hot, never "bleed" or reduce air pressure. The tires are hot from driving and it is normal for pressures to increase above recommended cold pressures. A hot tire at or below recommended cold inflation pressure could be significantly under-inflated.

To check inflation pressure:

1. Remove the cap from the valve on one tire, then firmly press the tire gauge onto the valve.
2. Add air to reach the recommended air pressure.
3. Replace the valve cap.
4. Repeat this procedure for each tire, including the spare.
5. Visually inspect the tires to make sure there are no nails or other objects embedded that could puncture the tire and cause an air leak.
6. Check the sidewalls to make sure there are no gouges, cuts, bulges or other irregularities.

NOTE

- If you overfill the tire, release air by pushing on the metal stem in the center of the valve. Then recheck the pressure with your tire gauge.
- Some spare tires require higher inflation pressure than the other tires. Consult the tire inflation tables or see the inflation pressure placard.

Tire specifications

Speed ratings

The speed ratings in the table translate as follow:

Speed ratings	
M	81 mph (130 km/h)
Q	100 mph (160 km/h)
T	118 mph (190 km/h)
H	130 mph (210 km/h)
W	168 mph (270 km/h)
V	149 mph (240 km/h)
Y	186 mph (300 km/h)

Load ratings

The speed ratings in the table translate as follow:

Load ratings	
91	1365 lbs (615 kg)
93	1433 lbs (650 kg)
99	1709 lbs (755 kg)

Wheels and tires

See also page 249 for an explanation of the designations on the sidewall of the tire.

Tire inflation pressure table – U.S. models

The following tire pressures are recommended by Volvo for your vehicle. Refer to the tire inflation placard for information specific to the tires installed on your vehicle at the factory.

Tire size	Cold tire pressure for up to 5 persons	
	Front psi/kPa	Rear psi/kPa
225/55 R 16 225/50 R 17 245/45 R 17	35/240	35/240
T 125/80 R 17	61/420	61/420

Tire inflation pressure table – Canadian models

The following tire pressures are recommended by Volvo for your vehicle. Refer to the tire inflation placard for information specific to the tires installed on your vehicle at the factory.

Tire size	Cold tire pressure for up to 5 persons		Optional tire pressure for up to 3 persons	
	Front psi/kPa	Rear psi/kPa	Front psi/kPa	Rear psi/kPa
225/55 R16 225/50 R 17 245/45 R 17	38/260	38/260	33/230	33/230
T 125/80 R 17	61/420	61/420	61/420	61/420

Tire designations

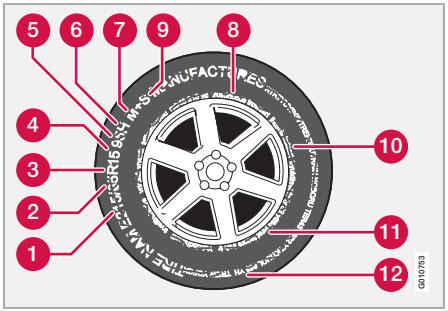

Federal law mandates that tire manufacturers place standardized information on the sidewall of all tires (see the illustration).

The following information is listed on the tire sidewall:

The tire designation (the following figures are examples of a tire designation):

1. **215**: the width of the tire (in millimeters) from sidewall edge to sidewall edge. The larger the number, the wider the tire.
2. **65**: The ratio of the tire's height to its width.
3. **R**: Radial tire.
4. **15**: The diameter of the wheel rim (in inches).
5. **95**: The tire's load index. In this example, a load index of 95 equals a maximum load of 1521 lbs (690 kg).
6. **H**: The tire's speed rating, or the maximum speed at which the tire is designed to be driven for extended periods of time, carrying a permissible load for the vehicle, and with correct inflation pressure. For example, H indicates a speed rating of 130 mph (210 km/h).

Wheels and tires

NOTE

This information may not appear on the tire because it is not required by law.

7. **M+S or M/S** = Mud and Snow, **AT** = All Terrain, **AS** = All Season
8. **U.S. DOT Tire Identification Number (TIN)**: This begins with the letters "DOT" and indicates that the tire meets all federal standards. The next two numbers or letters are the plant code where it was manufactured, the next two are the tire size code and the last four numbers represent the week and year the tire was built. For example, the numbers 317 mean the 31st week of 1997. After 2000 the numbers go to four digits. For example, 2501 means the 25th week of 2001. The numbers in between are marketing codes used at the manufacturer's discretion. This information helps a tire manufacturer identify a tire for safety recall purposes.
9. **Tire Ply Composition and Material Used**: Indicates the number of plies indicates or the number of layers of rubber-coated fabric in the tire tread and sidewall. Tire manufacturers also must indicate the ply materials in the tire and the sidewall, which include steel, nylon, polyester, and others.
10. **Maximum Load**: Indicates the maximum load in pounds and kilograms that can be carried by the tire. Refer to the vehicle's tire information placard or the safety certification label, located on the B-Pillar or the driver's door or on the inside of the fuel filler door on Canadian models, for the correct tire pressure for your vehicle.
11. **Treadwear, Traction, and Temperature grades**: See page 252 for more information.
12. Maximum permissible inflation pressure: the greatest amount of air pressure that should ever be put in the tire. This limit is set by the tire manufacturer.

Glossary of tire terminology

The tire suppliers may have additional markings, notes or warnings such as standard load, radial tubeless, etc.

- **Tire information placard**: A placard showing the OE (Original Equipment) tire sizes, recommended inflation pressure, and the maximum weight the vehicle can carry.
- **Tire Identification Number (TIN)**: A number on the sidewall of each tire providing information about the tire brand and manufacturing plant, tire size and date of manufacturer.
- **Inflation pressure**: A measure of the amount of air in a tire.
- **Standard load**: A class of P-metric or Metric tires designed to carry a maximum load at 35 psi [37 psi (2.5 bar) for Metric tires]. Increasing the inflation pressure beyond this pressure will not increase the tires load carrying capability.
- **Extra load**: A class of P-metric or Metric tires designed to carry a heavier maximum load at 41 psi [43 psi (2.9 bar) for Metric tires]. Increasing the inflation pressure beyond this pressure will not increase the tire's load carrying capability.
- **kPa**: Kilopascal, a metric unit of air pressure.
- **PSI**: Pounds per square inch, a standard unit of air pressure.
- **B-pillar**: The structural member at the side of the vehicle behind the front door.
- **Bead area of the tire**: Area of the tire next to the rim.
- **Sidewall of the tire**: Area between the bead area and the tread.
- **Tread area of the tire**: Area of the perimeter of the tire that contacts the road when mounted on the vehicle.
- **Rim**: The metal support (wheel) for a tire or a tire and tube assembly upon which the tire beads are seated.

- **Maximum load rating**: a figure indicating the maximum load in pounds and kilograms that can be carried by the tire. This rating is established by the tire manufacturer.
- **Maximum permissible inflation pressure**: the greatest amount of air pressure that should ever be put in the tire. This limit is set by the tire manufacturer.
- **Recommended tire inflation pressure**: inflation pressure, established by Volvo, which is based on the type of tires that are mounted on a vehicle at the factory. This inflation pressure is affected by the number of occupants in the vehicle, the amount of cargo, and the speed at which the vehicle will be driven for a prolonged period. This information can be found on the tire inflation placard(s) located on the driver's side B-pillar or on the inside of the fuel filler door on Canadian models, and in the tire inflation table in this chapter.
- **Cold tires**: The tires are considered to be cold when they have the same temperature as the surrounding (ambient) air. This temperature is normally reached after the vehicle has been parked for at least 3 hours.

Vehicle loading

Properly loading your vehicle will provide maximum return of vehicle design performance.

Before loading your vehicle, familiarize yourself with the following terms for determining your vehicle's weight ratings, with or without a trailer, from the vehicle's Federal/Canadian Motor Vehicle Safety Standards (FMVSS/CMVSS) label, and the vehicle's tire information placard:

Curb weight

The weight of the vehicle including a full tank of fuel and all standard equipment. It does not include passengers, cargo, or optional equipment.

Capacity weight

All weight added to the curb weight, including cargo and optional equipment. When towing, trailer hitch tongue load is also part of cargo weight.

NOTE

For trailer towing information, please refer to the section "Towing a trailer", see page 210.

Permissible axle weight

The maximum allowable weight that can be carried by a single axle (front or rear). These numbers are shown on the Federal/Canadian Motor Vehicle Safety Standards (FMVSS/CMVSS) label. The total load on each axle must never exceed its maximum permissible weight.

Gross vehicle weight (GVW)

The vehicle's curb weight + cargo + passengers.

NOTE

- The location of the various labels in your vehicle can be found on page 266.
- A table listing important weight limits for your vehicle can be found on page 271.

Steps for Determining Correct Load Limit

1. Locate the statement "the combined weight of occupants and cargo should never exceed XXX pounds" on your vehicle's placard.
2. Determine the combined weight of the driver and passengers that will be riding in your vehicle.
3. Subtract the combined weight of the driver and passengers from XXX kilograms or XXX pounds.

Wheels and tires

4. The resulting figure equals the available amount of cargo and luggage load capacity. For example, if the "XXX" amount equals 1400 lbs. and there will be five 150 lb. passengers in your vehicle, the amount of available cargo and luggage load capacity is 650 lbs. (1400 – 750 (5 × 150) = 650 lbs.)
5. Determine the combined weight of luggage and cargo being loaded on the vehicle. That weight may not safely exceed the available cargo and luggage load capacity calculated in Step 4.
6. If your vehicle will be towing a trailer, load from your trailer will be transferred to your vehicle. Consult this manual[1] to determine how this reduces the available cargo and luggage load capacity of your vehicle.

WARNING

- Exceeding the permissible axle weight, gross vehicle weight, or any other weight rating limits can cause tire overheating resulting in permanent deformation or catastrophic failure.
- Do not use replacement tires with lower load carrying capacities than the tires that were original equipment on the vehicle because this will lower the vehicle's GVW rating. Replacement tires with a higher limit than the originals do not increase the vehicle's GVW rating limitations.

Uniform Tire Quality Grading

ALL PASSENGER VEHICLE TIRES MUST CONFORM TO FEDERAL SAFETY REQUIREMENTS IN ADDITION TO THESE GRADES

Quality grades can be found, where applicable, on the tire sidewall between the tread shoulder and maximum section width. For example:

Treadwear 200 Traction AA Temperature A

TREADWEAR

The treadwear grade is a comparative rating based on the wear rate of the tire when tested under controlled conditions on a specified government test course. For example, a tire graded 150 would wear one and one half (1 1/2) times as well on the government course as a tire graded 100. The relative performance of tires depends upon the actual conditions of their use, however, and many depart significantly from the norm due to variation in driving habits, maintenance practices and differences in road characteristics and climate.

TRACTION

The traction grades, from highest to lowest, are AA, A, B, and C, as measured under controlled conditions on specified government test surfaces of asphalt and concrete. A tire marked C may have poor traction performance. The traction grade assigned to this tire is based on braking (straight-ahead) traction tests and is not a measure of cornering (turning) traction.

WARNING

The traction grade assigned to this tire is based on braking (straight-ahead) traction tests and is not a measure of cornering (turning) traction.

[1] See "Introduction" on page 210.

TEMPERATURE

The temperature grades are AA (the highest), A, B, and C, representing the tire's resistance to the generation of heat and its ability to dissipate heat when tested under controlled conditions on a specified indoor laboratory test wheel. Sustained high temperature can cause the material of the tire to degenerate and reduce tire life, and excessive temperature can lead to sudden tire failure. The grade C corresponds to a minimum level of performance that all passenger vehicle tires must meet under the Federal Motor Safety Standard No. 109. Grades B and A represent higher levels of performance on the laboratory test wheel than the minimum required by law.

WARNING

The temperature grade for this tire is established for a tire that is properly inflated and not overloaded. Excessive speed, underinflation, or excessive loading, either separately or in combination, can cause heat buildup and tire failure.

Snow chains, snow tires, studded tires

Snow chains

Snow chains can be used on your Volvo with the following restrictions:

- Snow chains should be installed on front wheels only. Use only Volvo approved snow chains.
- If accessory, aftermarket or "custom" tires and wheels are installed and are of a size different than the original tires and wheels, chains in some cases CANNOT be used. Sufficient clearances between chains and brakes, suspension and body components must be maintained.
- Some strap-on type chains will interfere with brake components and therefore CANNOT be used.
- **All Wheel Drive models**: Snow chains should only be installed on the front wheels. Only chains adapted for AWD models should be used.

Consult your Volvo retailer for additional snow chain information.

CAUTION

- Check local regulations regarding the use of snow chains before installing.
- Always follow the chain manufacturer's installation instructions carefully. Install chains as tightly as possible and retighten periodically.
- Never exceed the chain manufacturer's specified maximum speed limit. (Under no circumstances should you exceed 31 mph (50 km/h).
- Avoid bumps, holes or sharp turns when driving with snow chains.
- The handling of the vehicle can be adversely affected when driving with chains. Avoid fast or sharp turns as well as locked wheel braking.

Snow tires, studded tires[2]

Tires for winter use:

- Owners who live in or regularly commute through areas with sustained periods of snow or icy driving conditions are strongly advised to fit suitable winter tires to help retain the highest degree of traction.
- It is important to install winter tires on all four wheels to help retain traction during cornering, braking, and accelerating. Fail-

[2] Where permitted

Wheels and tires

ure to do so could reduce traction to an unsafe level or adversely affect handling.

- Do not mix tires of different design as this could also negatively affect overall tire road grip.
- Winter tires wear more quickly on dry roads in warm weather. They should be removed when the winter driving season has ended.
- Studded tires should be run-in 300 – 600 miles (500 – 1000 km) during which the vehicle should be driven as smoothly as possible to give the studs the opportunity to seat properly in the tires. The tires should have the same rotational direction throughout their entire lifetime.

NOTE

Please consult state or provincial regulations restricting the use of studded winter tires before installing such tires.

Temporary Spare

The spare tire in your vehicle is called a "Temporary Spare".

Recommended tire pressure (see the placard on the B-pillar or on the fuel filler door) should be maintained irrespective of which position on the vehicle the temporary spare tire is used on.

In the event of damage to this tire, a new one can be purchased from your Volvo retailer.

WARNING

Current legislation prohibits the use of the "Temporary Spare" tire other than as a temporary replacement for a punctured tire. It must be replaced as soon as possible by a standard tire. Road holding and handling may be affected with the "Temporary Spare" in use. Do not exceed 50 mph (80 km/h).

CAUTION

The vehicle must not be driven with wheels of different dimensions or with a spare tire other than the one that came with the vehicle. The use of different size wheels can seriously damage your car's transmission.

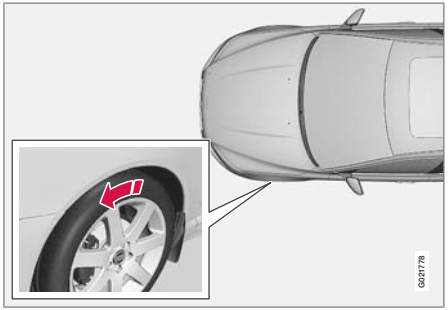

The arrow shows the direction of rotation of the tire

Summer and winter tires

- When switching between summer and winter tires, mark the tires to indicate where they were mounted on the vehicle, e.g. LF = left front, RR = right rear.
- Tires with tread designed to roll in only one direction are marked with an arrow on the sidewall.
- Incorrectly mounted tires impair the car's braking properties and ability to force aside rain, snow and slush.
- The tires with the most tread should always be at the rear (to reduce the risk of skidding).
- Contact a Volvo workshop if you are unsure about the tread depth.

Tire rotation

Your vehicle has no recommended tire rotation. The following information is intended to help you understand why.

Tread set

As a tire ages and the rubber cures, front and rear tires set at different angles. Therefore, if tires are rotated, the tread will eventually set at an angle that is a compromise. Even if ride, handling, and road noise may still seem acceptable, they may not be optimal. Further, tires that are rotated, but not on a regular basis, may actually cause more tire noise, faster tire wear, and unpleasant changes in steering feel and vehicle handling.

A tire that can fully adapt to its position will provide better steering feel, lower tire noise, and better fuel economy.

Braking stability performance

Your vehicle is driven mainly by the front tires, which will wear faster. This can be beneficial. Having more tread on the rear tires will help reduce oversteer. Oversteer is when a vehicle wants to keep turning because of momentum and dynamic forces on its suspension.

Suspension wear diagnostics

Every suspension needs periodic inspection and maintenance. A tire's wear pattern can be an aid in detecting a suspension problem. Each tire, if left in place, tells a story about the suspension. Tire rotation, on the other hand, could make suspension wear harder to detect. Early detection is very important, because suspension problems can make tire wear worse.

If you do rotate your tires...

Please follow the tire manufacturer's recommendations, as outlined in the tire manufacturers tire warranty pamphlet.

Your Volvo retailer can also provide guidance based on your particular driving circumstances.

Changing a wheel

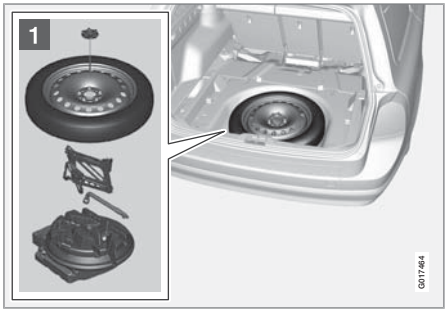

Location of jack and tools

Spare wheel

The spare wheel (Temporary spare) is only intended for temporary use. Replace the spare wheel with a normal wheel as soon as possible. The car's handling may be altered by the use of the spare wheel. The correct tire pressure for the spare wheel is stated in the tire pressure tables on pages 248 and 249.

WARNING

Current legislation prohibits the use of the “Temporary Spare” tire other than as a temporary replacement for a punctured tire. It must be replaced as soon as possible by a standard tire. Road holding and handling may be affected with the “Temporary Spare” in use.

CAUTION

The vehicle must never be driven with more than one temporary spare wheel.

The spare wheel is located in the spare wheel well with the rim side down. There are two foam blocks, one under the spare wheel and one over/inside. The upper one contains all tools.

The same bolt runs through to secure the spare wheel and the foam blocks.

Taking out the spare wheel

1. Fold the rear edge of the floor mat forward.
2. Open the floor hatch.

Wheels and tires

3. Undo the retaining bolt.
4. Lift out the foam block with tools.
5. Lift out the spare wheel.

The other two blocks can remain in the wheel well.

After use

The foam block and spare wheel must be replaced in the reverse order. Note the arrow on the upper foam block. It should point forward.

NOTE

If the floor hatch is not completely closed, the private locking feature (see page 59) will not function.

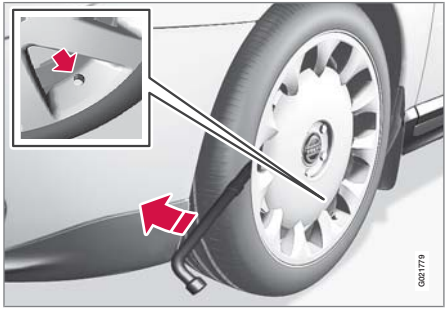

Removing the wheel cover

Changing a tire:

1. Apply the parking brake.
2. Put the gear selector in **P**.
3. Block the wheels that are on the ground with wooden blocks or large stones.
4. Remove the wheel cover (where applicable) using the lug wrench in the tool bag.With the vehicle still on the ground, use the lug wrench to loosen the wheel nuts 1/2 – 1 turns by exerting downward pressure.
5. Turn the nuts counterclockwise to loosen.

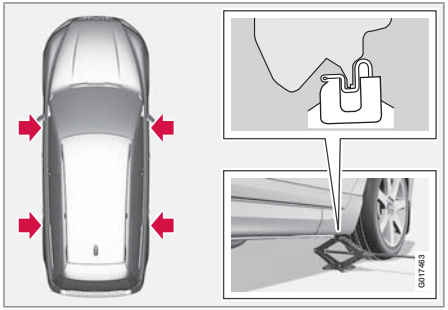

Jack attachment points

6. There are two jack attachment points on each side of the vehicle. Position the jack correctly in the attachment (see illustration above) and crank while simultaneously guiding the base of the jack to the ground. The base of the jack must be flat on a level, firm, non-slippery surface. Before raising the vehicle, check that the jack is still correctly positioned in the attachment.
7. Raise the vehicle until the wheel to be changed is lifted off the ground.
8. Unscrew the wheel nuts completely and carefully remove the wheel so as not to damage the threads on the studs.
9. Raise the vehicle until the wheel to be changed is lifted off the ground.
10. Unscrew the wheel nuts completely and carefully remove the wheel so as not to damage the threads on the studs.

WARNING

- The jack must correctly engage the jack attachment.
- Be sure the jack is on a firm, level, non-slippery surface.
- Never allow any part of your body to be extended under a vehicle supported by a jack.
- Use the jack intended for the vehicle when changing a tire. For any other job, use stands to support the vehicle.
- Apply the parking brake and put the gear selector in the Park (**P**) position.
- Block the wheels standing on the ground, use rigid wooden blocks or large stones.
- The jack should be kept well-greased and clean, and should not be damaged.
- No objects should be placed between the base of jack and the ground, or between the jack and the attachment bar on the vehicle.

Re-installing the wheel

1. Clean the contact surfaces on the wheel and hub.
2. Lift the wheel and place it on the hub.

Tighten the lug nuts

3. Install the wheel nuts and tighten hand-tight. Using the lug wrench, tighten cross-wise until all nuts are snug.
4. Lower the vehicle to the ground and alternately tighten the bolts crosswise to 62 ft. lbs. (85 Nm).
5. Install the wheel cap (where applicable).

Tire Sealing System

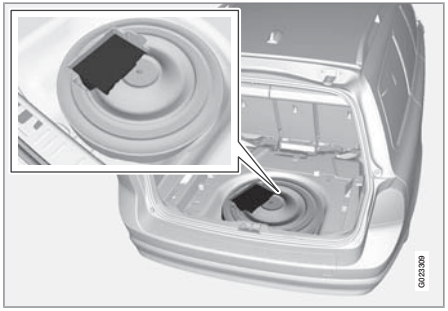

Introduction

Certain models are equipped with a tire sealing system that enables you to temporarily seal a hole in the tread surface and re-inflate a flat tire, or to adjust a tire's inflation pressure.

The system consists of an air compressor, a container for the sealing compound, wiring to connect the system to the vehicle's electrical system via one of the 12-volt sockets, and a hose used to connect the system to the tire's inflation valve.

The 12-volt sockets are located in the front tunnel console and on the rear side of the center console in the rear seat, see page 190.

Wheels and tires

Accessing the tire sealing system

The tire sealing system is stowed under the floor of the cargo area. To access it:

1. Fold up or remove any protective floor covering or carpet.
2. Open the floor hatch.
3. Remove the retaining screws.
4. Lift out the foam plastic block holding the jack and lug wrench.
5. Lift out the tire sealing system.

NOTE

- The tire sealing system is only intended to seal holes on the tire's tread area, not the sidewall.
- Tires with large holes or tears cannot be repaired with the tire sealing system.

WARNING

- After using the tire sealing system, the vehicle should not be driven farther than approximately 120 miles (200 km).
- Have the tire inspected by a trained and qualified Volvo service technician as soon as possible to determine if it can be permanently repaired or must be replaced.
- The vehicle should not be driven faster than 50 mph (80 km/h) while using a tire that has been temporarily repaired with the tire sealing system.
- After using the tire sealing system, drive carefully and avoid abrupt steering maneuvers and sudden stops.

Inflating tires

The tire sealing system can be used to inflate the tires. To do so:

1. Park the car in a safe place.
2. The compressor should be switched off. Ensure that the on/off switch is in position

   0 (the **0** side of the switch should be pressed down).
3. Take out the electrical wire and hose.
4. Remove the valve cap from the tire's inflation valve and screw the hose connector onto the valve as tightly as possible by hand.
5. Connect the electrical wire to the nearest 12-volt socket in the vehicle.
6. Start the vehicle's engine.

WARNING

- The vehicle's engine should be running when the tire sealing system is used to avoid battery drain. Therefore, be sure the vehicle is parked in a well ventilated place, or outdoors, before using the system.
- Children should never be left unattended in the vehicle when the engine is running.

7. Check the tire's inflation pressure on the gauge. Switch off the compressor briefly to get a clear reading from the pressure gauge.
8. Refer to the tire inflation tables for the correct inflation pressure. If the tire needs to be inflated, start the tire sealing system's compressor (press the on/off switch to position I). If necessary, release air from the tire by turning the air release knob counterclockwise.

CAUTION

The compressor should not be used for more than 10 minutes at a time to avoid overheating.

9. Turn off the compressor (press the on/off switch to position **0**) when the correct inflation pressure has been reached.
10. Unscrew the hose from the tire's inflation valve and reinstall the valve cap.
11. Disconnect the electrical wire from the 12-volt socket.

Tire Pressure Monitoring System (TPMS)–U.S models only

NOTE

USA – FCC ID: KR5S122780002

This device complies with part 15 of the FCC rules. Operation is subject to the following conditions: (1) This device may not cause harmful interference, and (2) this device must accept any interference received, including interference that may cause undesired operation.

The tire pressure monitoring system uses sensors mounted in the tire valves to check inflation pressure levels. When the vehicle is moving at a speed of approximately 20 mph (30 km/h) or faster, these sensors transmit inflation pressure data to a receiver located in the vehicle.

When low inflation pressure is detected, TPMS will light up the tire pressure warning light (⚠) (also referred to as a telltale) in the instrument panel, and will display a message in the text window. The wording of this message is determined by the degree of inflation pressure loss.

NOTE

If a fault occurs in TPMS, the tire pressure warning light will flash for approximately 1 minute and **TIRE PRESS SYST SERVICE REQUIRED** will be displayed.

Each tire, including the spare (if provided), should be checked monthly when cold and inflated to the inflation pressure recommended by the vehicle manufacturer on the vehicle placard or tire inflation pressure label. (If your vehicle has tires of a different size than the size indicated on the vehicle placard or tire inflation pressure label, you should determine the proper tire inflation pressure for those tires.)

As an added safety feature, your vehicle has been equipped with a tire pressure monitoring system (TPMS) that illuminates a low tire pressure telltale when one or more of your tires is significantly under-inflated. Accordingly, when the low tire pressure telltale illuminates, you should stop and check your tires as soon as possible, and inflate them to the proper pressure. Driving on a significantly under-inflated tire causes the tire to overheat and can lead to tire failure. Under-inflation also reduces fuel efficiency and tire tread life, and may affect the vehicle's handling and stopping ability.

Please note that the TPMS is not a substitute for proper tire maintenance, and it is the driver's responsibility to maintain correct tire pressure, even if under-inflation has not reached the level to trigger illumination of the TPMS low tire pressure telltale.

Your vehicle has also been equipped with a TPMS malfunction indicator to indicate when the system is not operating properly. The TPMS malfunction indicator is combined with the low tire pressure telltale. When the system detects a malfunction, the telltale will flash for approximately one minute and then remain continuously illuminated. This sequence will continue upon subsequent vehicle start-ups as long as the malfunction exists. When the malfunction indicator is illuminated, the system may not be able to detect or signal low tire pressure as intended. TPMS malfunctions may occur for a variety of reasons, including the

Wheels and tires

installation of replacement or alternate tires or wheels on the vehicle that prevent the TPMS from functioning properly. Always check the TPMS malfunction telltale after replacing one or more tires or wheels on your vehicle to ensure that the replacement or alternate tires and wheels allow the TPMS to continue to function properly.

NOTE

TPMS indicates low tire pressure but does not replace normal tire maintenance. For information on correct tire pressure, please refer to the Tire inflation pressure tables or consult your Volvo retailer.

Erasing warning messages

When a low tire pressure warning message has been displayed, and the tire pressure warning light has come on:

1. Use a tire pressure gauge to check the inflation pressure of all four tires.
2. Re-inflate the tire(s) to the correct pressure (consult the tire pressure placard or the tables on pages 248 and 249.
3. In certain cases, it may be necessary to drive the vehicle for several minutes at a speed of 20 mph (30 km/h) or faster. This will erase the warning text and the warning light will go out.

WARNING

Incorrect inflation pressure could lead to tire failure, resulting in a loss of control of the vehicle.

Changing wheels with TPMS

Please note the following when changing or replacing the factory installed TPMS wheels/ tires on the vehicle:

- Only the factory-mounted wheels are equipped with TPMS sensors in the valves.
- If the vehicle is equipped with a temporary spare tire, this tire does not have a TPMS sensor.
- If wheels without TPMS sensors are mounted on the vehicle, TIRE PRESS SYST SERVICE REQUIRED will be displayed each time the vehicle is driven above 25 mph (40 km/h) for 10 minutes or more.
- Once TPMS sensors are properly installed, the warning message should not reappear. If the message is still displayed, drive the vehicle for several minutes at a speed of 20 mph (30 km/h) or faster to erase the message.
- Volvo recommends that TPMS sensors be fitted on all wheels used on the vehicle. Volvo does not recommend moving sensors back and forth between sets of wheels.

NOTE

- If you change to tires with a different recommended inflation pressure, the TPMS system must be recalibrated to these tires. This must be done by a trained and qualified Volvo service technician.
- If a tire is changed, or if the TPMS sensor is moved to another wheel, the sensor's seal, nut, and valve core should be replaced.
- When installing TPMS sensors, the vehicle must be parked for at least 15 minutes with the ignition off. if the vehicle is driven within 15 minutes, a TPMS error message will be displayed.

CAUTION

When inflating tires with TPMS valves, press the pump's mouthpiece straight onto the valve to help avoid bending or otherwise damaging the valve.

Washing the car

WARNING

Be sure that the compressor is not connected to a 12-volt socket while replacing the container.

The following points should be kept in mind when washing and cleaning the car:

- The car should be washed at regular intervals since dirt, dust, insects and tar spots adhere to the paint and may cause damage. To help prevent corrosion, it is particularly important to wash the car frequently in the wintertime.
- Avoid washing your car in direct sunlight. Doing so may cause detergents and wax to dry out and become abrasive. To avoid scratching, use lukewarm water to soften the dirt before you wash with a soft sponge, and plenty of sudsy water.
- **Bird droppings**: Remove from paintwork as soon as possible. Otherwise the finish may be permanently damaged.
- A detergent can be used to facilitate the softening of dirt and oil.
- A water-soluble grease solvent may be used in cases of sticky dirt. However, use a wash place equipped with a drainage separator.
- Dry the car with a clean chamois and remember to clean the drain holes in the doors and rocker panels.
- Tar spots can be removed with kerosene or tar remover after the car has been washed.
- A stiff-bristle brush and lukewarm soapy water can be used to clean the wiper blades. Frequent cleaning of the windshield and wiper blades improves visibility considerably and also helps prolong the service life of the wiper blades.
- Wash off the dirt from the underside (wheel housings, fenders, etc).
- In areas of high industrial fallout, more frequent washing is recommended.
- After cleaning the engine, the spark plug wells should be inspected for water and blown dry if necessary.

NOTE

When washing the car, remember to remove dirt from the drain holes in the doors and sills.

CAUTION

- During high pressure washing, the spray mouthpiece must never be closer to the vehicle than 13" (30 cm). Do not spray into the locks.
- Dirt, snow, etc., on the headlights can reduce lighting capacity considerably. Clean the headlights regularly, for example when refueling.
- When washing or steam cleaning the engine, avoid spraying water or steam directly on the electrical components or toward the rear side of the engine. Special moonroof cautions:
- Always close the moonroof and sun shade before washing your vehicle.
- Never use abrasive cleaning agents on the moonroof.
- Never use wax on the rubber seals around the moonroof.

Exterior components

Volvo recommends the use of special cleaning products, available at your Volvo retailer, for cleaning colored plastic, rubber, or ornamental components such as chromed strips on the exterior of your vehicle. The instructions for using these products should be followed care-

Vehicle care

fully. Solvents or stain removers should not be used.

CAUTION

- Avoid waxing or polishing plastic or rubber components
- Polishing chromed strips can wear away or damage the surface
- Polishes containing abrasive substances should not be used

Automatic car wash

- We do NOT recommend washing your car in an automatic wash during the first six months (because the paint will not have hardened sufficiently).
- An automatic wash is a simple and quick way to clean your car, but it is worth remembering that it may not be as thorough as when you yourself go over the car with sponge and water. Keeping the underbody clean is most important, especially in the winter. Some automatic washers do not have facilities for washing the underbody.

CAUTION

- Before driving into an automatic car wash, turn off the optional rain sensor to avoid damaging the windshield wipers.
- Make sure that side view mirrors, auxiliary lamps, etc, are secure, and that any antenna(s) are retracted or removed. Otherwise there is risk of the machine dislodging them.
- **Chromed wheels:** Clean chrome-plated wheels using the same detergents used for the body of the vehicle. Aggressive wheel-cleaning agents can permanently stain chrome-plated wheels.

WARNING

- When the vehicle is driven immediately after being washed, apply the brakes, including the parking brake, several times in order to remove any moisture from the brake linings.
- Engine cleaning agents should not be used when the engine is warm. This constitutes a fire risk.

Exterior lighting

Condensation may form temporarily on the inside of the lenses of exterior lights such as headlights, fog lights, or taillights. This is normal and the lights are designed to withstand moisture. Normally, condensation will dissipate after the lights have been on for a short time.

Polishing and waxing

- Normally, polishing is not required during the first year after delivery, however, waxing may be beneficial.
- Before applying polish or wax the vehicle must be washed and dried. Tar spots can be removed with kerosene or tar remover. Difficult spots may require a fine rubbing compound.
- After polishing use liquid or paste wax.
- Several commercially available products contain both polish and wax.
- Waxing alone does not substitute for polishing a dull surface.
- A wide range of polymer-based waxes can be purchased today. These waxes are easy to use and produce a long-lasting, high-gloss finish that protects the bodywork against oxidation, road dirt and fading.
- Do not polish or wax your vehicle in direct sunlight (the surface of the vehicle should not be warmer than 113 °F (45 °C).

CAUTION

Volvo does not recommend the use of long-life or durable paint protection coatings, some of which may claim to prevent pitting, fading, oxidation, etc. These coatings have not been tested by Volvo for compatibility with your vehicle's clear coat. Some of them may cause the clear coat to soften, crack, or cloud. Damage caused by application of paint protection coatings may not be covered under your vehicle's paint warranty.

Cleaning the interior

Only use cleaning agents and car care products recommended by Volvo. Clean regularly and follow the instructions included with the car care product.

Upholstery care

Fabric

Clean with soapy water or a detergent. For more difficult spots caused by oil, ice cream, shoe polish, grease, etc., use a clothing/fabric stain remover. Consult your Volvo retailer.

Alcantera™ suede-like material

Suede-like upholstery can be cleaned with a soft cloth and mild soap solution.

Leather care

Volvo's leather upholstery is manufactured with a protectant to repel soiling. Over time, sunlight, grease and dirt can break down the protection. Staining, cracking, scuffing, and fading can result.

Volvo offers an easy-to-use, non-greasy leather care kit formulated to clean and beautify your vehicle's leather, and to renew the protective qualities of its finish. The cleaner removes dirt and oil buildup. The light cream protectant restores a barrier against soil and sunlight.

Volvo also offers a special leather softener that should be applied after the cleaner and protectant. It leaves leather soft and smooth, and reduces friction between leather and other finishes in the vehicle.

Volvo recommends cleaning, protecting and conditioning your vehicle's leather two to four times a year. Ask your Volvo retailer about Leather Care Kit 951 0251 and Leather Softener 943 7429.

Cleaning leather upholstery

1. Pour leather cleaner on a damp sponge and squeeze it until the cleaner foams.
2. Apply the foam to the stain by moving the sponge with circular movements.
3. Dampen the stain thoroughly with the sponge. Let the sponge absorb the stain, do not rub.
4. Dry the stain with soft paper towels or a towel, and allow the leather to dry completely.

Protecting leather upholstery

1. Put a small amount of protectant cream on a cloth and apply a thin coating of cream to the upholstery with light circular movements.
2. Allow the leather to dry for 20 minutes.

This will help the leather resist staining and protect against sunlight's harmful UV rays.

Vehicle care

CAUTION

- Under no circumstances should gasoline, naphtha or similar cleaning agents be used on the plastic or the leather since these can cause damage.
- Take extra care when removing stains such as ink or lipstick since the coloring can spread.
- Use solvents sparingly. Too much solvent can damage the seat padding.
- Start from the outside of the stain and work toward the center.
- Sharp objects (e.g. pencils or pens in a pocket) or Velcro fasteners on clothing may damage the textile upholstery.
- Clothing that is not colorfast, such as new jeans or suede garments, may stain the upholstery.

Cleaning the seat belts

Clean only with lukewarm water and a mild soap solution.

Cleaning floor mats

The floor mats should be vacuumed or brushed clean regularly, especially during winter when they should be taken out for drying. Spots on textile mats can be removed with a mild detergent. For best protection in winter, Volvo recommends the use of Volvo rubber floor mats. Consult your Volvo retailer.

Spots on interior plastic, metal, or wood surfaces

Cleaning interior plastic components should be done with a cleaning agent specially designed for this purpose. Consult your Volvo retailer.

Touching up paintwork

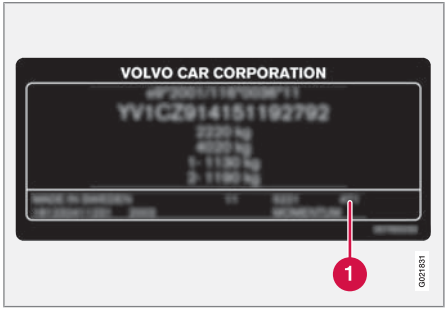

Paint code on the model plate[1]

Paint damage requires immediate attention to avoid rusting. Make it a habit to check the finish regularly, for instance washing the vehicle. Touch-up if necessary.

Paint repairs require special equipment and skill. Contact your Volvo retailer for any extensive damage.

Minor scratches can be repaired by using Volvo touch-up paint.

Color code

Make sure you have the right color. The color code number is stated on the model plate.

Minor stone chips and scratches

Material:

- Primer – can
- Paint – touch-up pen
- Brush
- Masking tape

If the stone chip has not gone down to the bare metal and an undamaged color coat remains, you can add paint immediately after removing dirt.

NOTE

When touching up the vehicle, it should be clean and dry. The surface temperature should be above 60 °F (15 °C).

[1] see page 266 for the location of the model plate.

Minor scratches on the surface
If the stone chip has not penetrated down to the metal and an undamaged layer of paint remains, the touch-up paint can be applied as soon as the spot has been cleaned.

Repairing stone chips

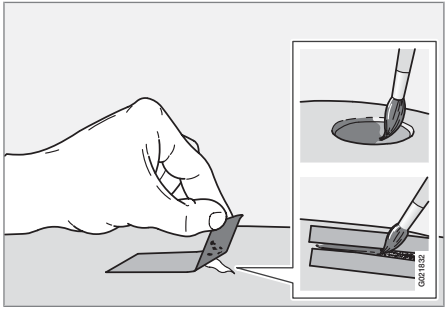

1. Place a strip of masking tape over the damaged surface. Pull the tape off so that any loose flakes of paint adhere to it.
2. Thoroughly mix the primer and apply it with a small brush.
3. When the primer surface is dry, the paint can be applied using a brush. Mix the paint thoroughly; apply several thin paint coats and let dry after each application.
4. If there is a longer scratch, you may want to protect surrounding paint by masking it off
5. After a few days, polish the touched-up areas. Use a soft rag and a small amount of polish.

Label information

Location of labels

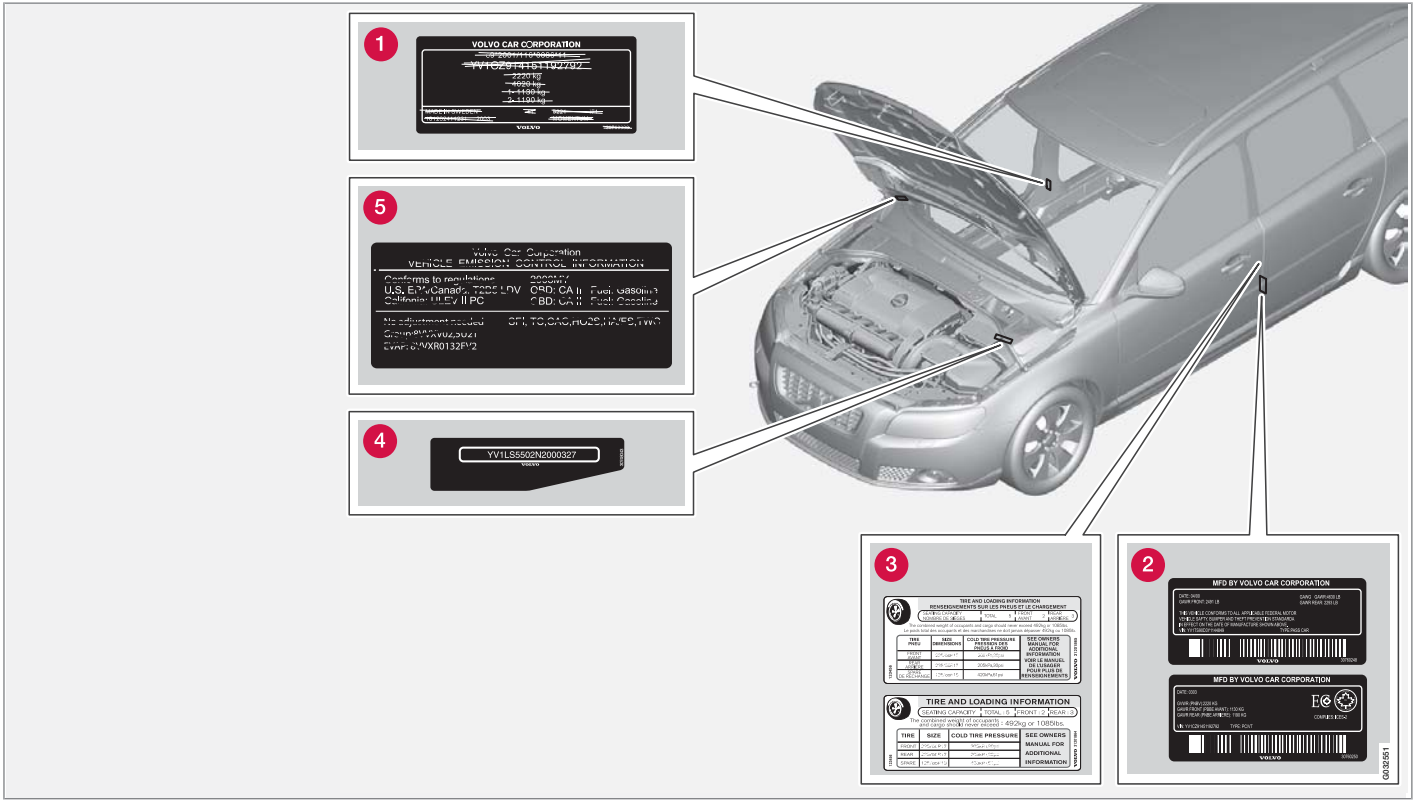

List of labels

1. **Model plate.** Vehicle Identification Number (VIN). Codes for color and upholstery, etc.
2. **Federal Motor Vehicle Safety Standards (FMVSS) specifications (USA) and Ministry of Transport (CMVSS) standards (Canada).** Your Volvo is designed to meet all applicable safety standards, as evidenced by the certification label on the facing side of the driver's door. For further information regarding these regulations, please consult your Volvo retailer.
3. **Loads and Tire Pressures.** The appearance of the decal will vary, depending on the market for which the vehicle is intended. See also page 246.
4. **Vehicle Identification Number (VIN).** The VIN plate is located on the top left surface of the dashboard. The Vehicle Identification Number (VIN) should always be quoted in all correspondence concerning your vehicle with the retailer and when ordering parts.
5. **Vehicle Emission Control Information.** Your Volvo is designed to meet all applicable emission standards, as evidenced by the certification label on the underside of the hood. For further information regarding these regulations, please consult your Volvo retailer.

Specifications

Dimensions–V70

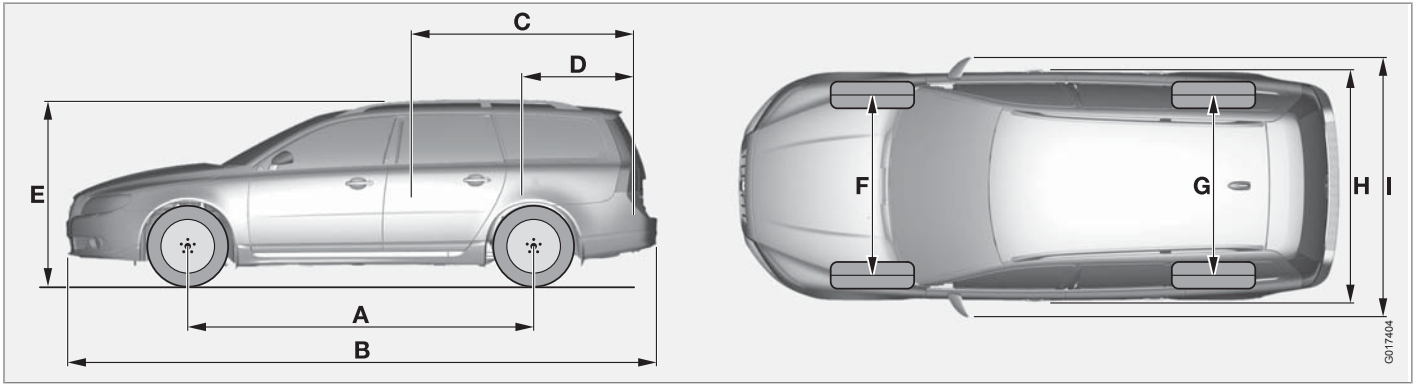

Position	Dimension	in (mm)
A	Wheelbase	110.9 (2816)
B	Length	189.9 (4823)
C	Load length, floor, seatback down	73.9 (1878)
D	Load length, floor	42.9 (1089)
E	Height	60.9 (1547)
F	Track, front	62.5 (1588)
G	Track, rear	62.4 (1586)

Specifications

Position	Dimension	in (mm)
H	Width	73.3 (1861)
I	Width, incl. door mirrors	82.9 (2106)

Specifications

Dimensions-XC70

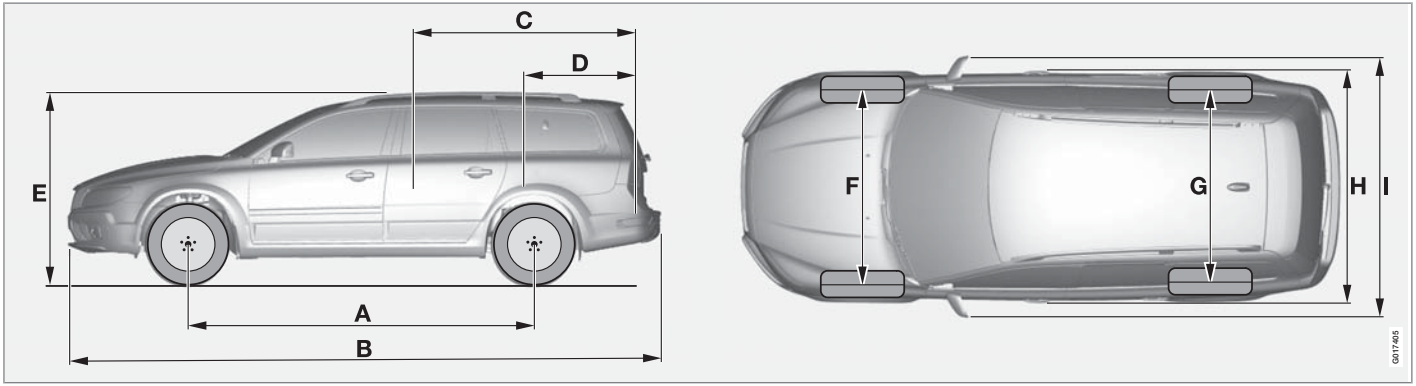

Position	Dimension	in (mm)
A	Wheelbase	110.8 (2815)
B	Length	190.5 (4838)
C	Load length, floor, seatback down	73.9 (1878)
D	Load length, floor	42.9 (1089)
E	Height	63.1 (1604)
F	Track, front	63.1 (1604)
G	Track, rear	61.8 (1570)

Position	Dimension	in (mm)
H	Width	73.3 (1861)
I	Width, incl. door mirrors	83.4 (2119)

Weights

Category	USA	Canada
Gross vehicle weight	V70: 5070 lbs XC70 non-turbo: 5270 lbs XC70 turbo: 5310 lbs	V70: 2300 kg XC70 non-turbo: 2390 kg XC70 turbo: 2410 kg
Capacity weight	V70: 950 lbs XC70 non-turbo: 900 lbs XC70 turbo: 900 lbs	V70: 430 kg XC70 non-turbo: 410 kg XC70 turbo: 410 kg
Permissible axle weights, front	V70: 2690 lbs XC70 non-turbo: 2800 lbs XC70 turbo: 2820 lbs	V70: 1220 kg XC70 non-turbo: 1270 kg XC70 turbo: 1280 kg
Permissible axle weights, rear	V70: 2510 lbs XC70 non-turbo: 2640 lbs XC70 turbo: 2640 lbs	V70: 1140 kg XC70 non-turbo: 1200 kg XC70 turbo: 1200 lbs
Curb weight	3860 – 4220 lbs	1745 – 1920 kg
Max. roof load	220 lbs	100 kg

Specifications

Category	USA	Canada
Max. trailer weights	Without brakes: 1650 lbs With brakes, 1 7/8” ball: 2,000 lbs With brakes, 2” ball: 3,300 lbs	Without brakes: 750 kg With brakes, 1 7/8” ball: 900 kg With brakes, 2” ball: 1500 kg
Max. tongue weight	165 lbs	75 kg

Engine specifications

Specification/Model	3.2 6-cyl.	3.0T[A]
Engine designation	B6324S	B6304T2
Output (kW/rps)	175/103	210/93
Output (hp/rpm)	235/6200	281/5600
Torque (Nm/rps)	320/53	400/25 – 80
Torque (ft. lbs./rpm)	236/3200	295/1500 – 4800
No. of cylinders	6	6
Bore (in/mm)	3.31/84	3.23/82
Stroke (in/mm)	3.78/96	3.67/93.2
Displacement	3.19 liters (194.8 cu. in.)	2.95 liters (175 cu. in.)
Compression ratio	10.8:1	9.3:1

[A] This engine may not be available on all markets

Engine oil

Engine oil must meet the minimum ILSAC specification GF-4, API SL, or ACEA A1/B1. Lower quality oils may not offer the same fuel economy, engine performance, or engine protection.

Volvo recommends Castrol.

Depending on your driving habits, premium or synthetic oils may provide superior fuel economy and engine protection. Consult your Volvo retailer for recommendations on premium or synthetic oils.

Oil additives must not be used.

Synthetic oil is not used when the oil is changed at the normal maintenance services. This oil is only used at customer request, at additional charge. Please consult your Volvo retailer.

Oil viscosity (stable ambient temperatures)

Operation in hot climates

When temperatures exceed 104 °F (40 °C) in your area, Volvo recommends, for the protection of your engine, that you use a heavier weight oil, such as such as SAE 5W-40 or 0W-40. See the viscosity chart.

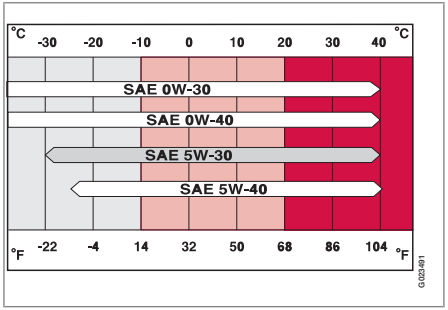

Viscosity table

Operation in temperate climates

Incorrect viscosity oil can shorten engine life. Under normal use when temperatures do not exceed 104 °F (40 °C), SAE 5W-30 will provide good fuel economy and engine protection. See the viscosity chart.

Extreme engine operation

Synthetic oils meeting SAE 0W-30 or 0W-40 and complying with oil quality requirements are recommended for driving in areas of sustained temperature extremes (hot or cold), when towing a trailer over long distances, and for prolonged driving in mountainous areas.

American Petroleum Institute (API) symbol

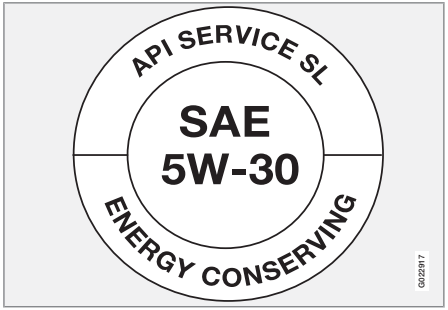

The API Service Symbol "donut" is divided into three parts:

- The upper section describes the oil's performance level.
- The center identifies the oil's viscosity.
- The lower section indicates whether the oil has demonstrated energy-conserving properties in a standard test in comparison to a reference oil.

Specifications

Oil volume

Engine model		Oil volume between MIN and MAX	Volume (incl. filter)
3.2 (6-cyl.)	B6324S	1.27 US qts (1.2 liters)	7.82 US qts (7.4 liters)
3.0T (6 cyl.)	B6304T2	1.27 US qts (1.2 liters)	7.82 US qts (7.4 liters)

Other fluids and lubricants

Fluid	System	Volume	Specification
Transmission oil[A]	Automatic (TF-80SC)	7.4 US qts (7.0 liters)	Transmission fluid JWS 3309
Coolant	3.2 (6-cyl.)	9.4 US qts. (8.9 liters)	Coolant with corrosion inhibitor mixed with water (50/50 mix), see packaging.
	3.0T	9.4 US qts. (8.9 liters)	
Air conditioning	3.2 6-cyl.	1.4 lbs (620 g)	Refrigerant: R134a (HFC134a), PAG oil
Brake fluid		0.63 US qts (0.6 liters)	DOT 4+
Power steering		1.26 US qts (1.2 liters)	Power steering fluid WSS M2C204-A2 or equivalent product.

Fluid	System	Volume	Specification
Washer fluid		6.8 US qts (6.5 liters) 4.7 US qts (4.5 liters[B])	Use a washer antifreeze recommended by Volvo, mixed with water.
Fuel tank volume	3.0T/3.2 6 cyl.	18.5 US gallons (70 liters)	

[A] Under normal driving conditions the transmission oil does not need changing during its service life. However, it may be necessary under adverse driving conditions.
[B] Models without headlight washers

Electrical system

General information

12 volt system with a voltage-regulated alternator. Single pole system in which the chassis and engine block are used as conductors. The negative terminal is connected to the chassis.

Performance, battery	
Engine	3.2 6-cyl./3.0T
Voltage (V)	12
Cold start capacity (A)	520 – 700
Reserve capacity (min)	100 – 135

WARNING

PROPOSITION 65 WARNING!

Battery posts, terminals, and related accessories contain lead and lead compounds, chemicals known to the state of California to cause cancer and reproductive harm. Wash hands after handling.

CAUTION

If the battery is replaced, replace it with a battery of the same cold start capacity and reserve capacity as the original (see the decal on the battery).

Volvo programs

Volvo On Call Roadside Assistance

Your new Volvo comes with a four year ON CALL roadside assistance. Additional information, features, and benefits are described in a separate information package in your glove compartment.

If you require assistance, dial:

American customers: 1-800-638-6586 (1-800-63-VOLVO)

Canadian customers: 1-800-263-0475

Technician certification

In addition to Volvo factory training, Volvo supports certification by the National Institute for Automotive Service Excellence (A.S.E.). Certified technicians have demonstrated a high degree of competence in specific areas. Besides passing exams, each technician must also have worked in the field for two or more years before a certificate is issued. These professional technicians are best able to analyze vehicle problems and perform the necessary maintenance procedures to keep your Volvo at peak operating condition.

1, 2, 3 ...

12-volt sockets..... 190

A

Accessory installation warning..... 9
Active Bi-Xenon headlights..... 86
Active chassis system..... 157
Active yaw control..... 155
Adaptive cruise control.... 166, 167, 168, 169
Airbags
disconnecting the front passenger's side..... 23, 24
front..... 19, 20, 21
inflatable curtain..... 29
side impact..... 27
Air conditioning..... 127
Air distribution..... 125
Air distribution table..... 130
Air vents..... 125
All Wheel Drive..... 109
Anti-freeze..... 196, 222
Anti-lock brake system..... 110
warning light..... 72
Approach lighting..... 54, 89
Audio system
audio functions..... 134
CD player/changer..... 135, 136
menu control..... 132
overview..... 131
radio functions..... 137
Rear seat entertainment (option)..... 149
Sirius satellite radio..... 138, 140, 141
sound settings..... 134
steering wheel keypad..... 131
USB/iPOD connector..... 132
Auto-dim rearview mirror..... 97
Automatic locking retractor..... 34
Automatic transmission
Geartronic..... 108
general description..... 107, 108
oil..... 274
shiftlock override..... 108
Axle weight..... 251

B

Battery
changing..... 233, 234
maintenance..... 233
remote control, replacing..... 57
specifications..... 275
warning symbols..... 233
Black box..... 8, 216
Blind Spot Information System (BLIS)..... 184, 185, 186
Booster cushion, integrated..... 45
Booster cushions..... 41
Brake lights..... 86
emergency brake lights..... 86
Brake system
checking fluid level..... 222
emergency brake assistance..... 111
fluid..... 274
general information..... 110
Hill Descent Control..... 112
warning light..... 74
Bulbs
cargo area lighting..... 229
footwell lighting..... 229
headlights..... 224, 225, 226

introduction..... 224
license plate lights..... 229
side marker lights..... 227
specifications..... 230
taillight..... 228

C

Capacity weight..... 251
Cargo area
changing bulbs..... 229
floor rails..... 204
hooks for securing loads..... 204
steel grid..... 207
Cargo area cover..... 208
Cargo area net..... 208
Catalytic converter..... 200
CD player/changer..... 135, 136
Cell phone, hands-free connection..... 143
Central locking system, introduction..... 52
Chains..... 253
Check engine light..... 72
Child restraints
recalls and registration..... 44
Child restraint systems..... 35
booster cushions..... 41
convertible seats..... 39
infant seats..... 37
ISOFIX/LATCH anchors..... 42
top tether anchors..... 43
Child safety..... 33, 34
booster cushions..... 41
child restraint systems..... 35
convertible seats..... 39
infant seats..... 37
Child safety locks..... 48
Climate system..... 128
air distribution..... 125, 130
air vents..... 125
Interior Air Quality System..... 125
introduction..... 124
passenger compartment filter..... 124
refrigerant..... 124
Clock, setting..... 76
Cold weather driving..... 196
Collision warning system..... 160
Compass in rearview mirror..... 153
Conserving electrical current..... 195
Convertible seats..... 39
Coolant..... 222, 274
Cooling system, general information..... 195
Courtesy lighting..... 88, 89
Crash mode..... 32
Cruise control..... 158, 159
adaptive..... 166, 167, 168, 169
Curb weight..... 251
Current, conserving..... 195

D

Defroster..... 128
Detachable key blade..... 57, 59
Dimensions
V70..... 268
XC70..... 270
Disconnecting the front passenger's air-bag..... 23, 24
Dome lighting..... 88, 89
Door mirrors..... 96
Driver distraction warning..... 9
Driving economically..... 194
Driving in cold weather..... 196
Driving through water..... 195

E

ECC..... 126, 127, 128
Economical driving..... 194
Electric parking brake..... 114
Electronic Climate Control..... 126, 127, 128
air distribution table..... 130
Interior Air Quality System..... 128
ventilated seats..... 126
Emergency brake lights..... 86
Emergency locking retractor..... 34
Emergency starting..... 105
Emergency towing..... 212, 213
Emission inspection readiness..... 217
Engine
overheating..... 75
specifications..... 272
starting..... 103
starting with keyless drive..... 104
Engine compartment overview..... 219
Engine oil
checking..... 220
low pressure warning light..... 73
specifications..... 273
volumes..... 274
Environment..... 10
Eyelets for anchoring loads..... 203

F

Federal Clean Air Act..... 216
Floor rails..... 204
Fluid specifications..... 274
Fog lights
front..... 73
front, changing bulbs..... 228
front/rear..... 86
Four C (active chassis system)..... 157
Front airbags..... 19, 20, 21
disconnecting passenger's side air-bag..... 23, 24
Front fog lights..... 73, 86
changing bulbs..... 228
Front park assist..... 181, 183
Front seats..... 79, 80
heated..... 126
Fuel filler cap..... 200
Fuel filler door, opening..... 200
Fuel level warning light..... 73
Fuel requirements..... 198, 199
Fuel tank volume..... 274
Fuses..... 236, 237, 240, 242

G

Gasoline requirements..... 199
Gas tank volume..... 274
Gauges..... 71
Geartronic..... 108
Geartronic automatic transmission..... 108
Generator warning light..... 74
Glossary of tire terminology..... 250
Grocery bag holder..... 205
Gross vehicle weight..... 251

H

Hands-free connection (cell phone) (Cell phone, hands-free connection)..... 143
Hazard warning flashers..... 87

Headlights
active bi-xenon lights..... 86
changing bulbs..... 225, 226
high/low beams..... 85
high beam flash..... 85
switch..... 85
Headlight washers..... 92
Head restraints, rear seat..... 82
Heartbeat sensor (alarm system)..... 55
Heated front seats..... 126
Heated oxygen sensors..... 201
Heated rear seats..... 127
High beams..... 85
indicator light..... 73
Hill Descent Control..... 112
Home safe lighting..... 89
Hood, opening/closing..... 219
Horn..... 84

I

Ignition modes..... 77
Immobilizer..... 52
Important information..... 8
Indicator lights..... 71, 72, 73
Infant seats..... 37
Inflatable Curtain..... 29
Inflation pressure..... 246, 247
Inflation pressure tables..... 248, 249
Information lights..... 71, 72, 73
Information symbol..... 73
Inspection readiness..... 217
Instrument lighting..... 85
Instrument overview..... 70, 71
Instrument panel..... 121
Integrated two-stage booster cushion..... 45
Interior Air Quality System..... 125
Interior lighting..... 88, 89
iPOD connector (audio system)..... 132
ISOFIX anchors..... 42

J

Jack
attaching..... 256
location of..... 255
Jump starting..... 105

K

Key blade..... 52, 57, 59
private locking..... 59
Keyless drive
starting the engine..... 104

L

Labels
list of..... 267
location of..... 266
LATCH anchors..... 42
Leather care..... 263
Lighting panel..... 85
Load anchoring eyelets..... 203
Loading
floor rails..... 204
hooks for securing loads..... 204
Loading the vehicle..... 202, 251
roof loads..... 206
Locking the vehicle..... 54
Locks, child safety..... 48
Low beams..... 85

Low fuel level warning light..... 73
Low oil pressure warning light..... 73

M

Main instrument panel..... 121
Maintenance..... 216
performed by the owner..... 217
Malfunction indicator light..... 72
Menu system..... 120
overview..... 120
Messages in the instrument panel..... 121
Mirrors
defroster..... 97
power door..... 96
rearview, auto-dim function..... 97
retractable..... 96
vanity..... 190
Moonroof..... 98, 99
Motor oil
checking..... 220
specifications..... 273
volumes..... 274

N

Net in cargo area..... 208

O

Occupant safety..... 14
Occupant weight sensor..... 23, 24
Octane recommendations..... 199
Odometer, trip..... 76
Oil
specifications..... 273
volumes..... 274
On Call Roadside Assistance..... 276
Overhead courtesy lighting..... 88, 89
Overheating, engine..... 75
Oxygen sensors, heated..... 201

P

Paint, touching up..... 264
Park assist..... 181, 183
Parking brake
electric, applying/releasing..... 114
warning light..... 73
Parking lights..... 86
changing bulbs..... 226
Personal Car Communicator, unique functions..... 55
Polishing..... 263
Power front seat
memory function..... 79
with keyless drive..... 80
Power mirrors..... 96
defroster..... 97
Power moonroof..... 98, 99
Power steering
speed-dependent..... 157
Power steering fluid..... 222, 274
Power tailgate (option)..... 202
Power windows..... 94, 95
laminated glass..... 95
Pregnancy, using seat belts during..... 17
Private locking..... 59
PROPOSITION 65 WARNING..... 10, 105, 234, 275

R

Radio
Sirius satellite radio..... 138, 140, 141
Radio functions..... 137
Rails, floor..... 204
Rain sensor..... 91
READ button..... 121
Rear fog light..... 86
Rear park assist..... 181, 183
Rear seat entertainment (option)..... 149
Rear seats
center head restraint..... 82
folding..... 81
heated..... 127
Rearview mirror
auto-dim function..... 97
compass..... 153
Rear window defroster..... 97
Recalls, child restraints..... 44
Refrigerant..... 274
Refueling..... 198, 199
fuel filler cap..... 200
fuel filler door..... 200
fuel tank volume..... 274
Registering child restraints..... 44
Remote control..... 52
approach lighting..... 54
common functions..... 54
immobilizer..... 52
key blade..... 52, 57, 59
key memory..... 52
locking the vehicle..... 54
Personal Car Communicator..... 54, 55
private locking..... 59
replacing the battery..... 57
unlocking the vehicle..... 54
Reporting safety defects..... 15
Roadside Assistance..... 276
Roof loads..... 206

S

Safety, occupant..... 14
Safety defects, reporting..... 15
Seat belts
Automatic locking retractor/Emergency locking retractor..... 34
buckling..... 16
maintenance..... 16
pretensioners..... 16
reminder..... 16
reminder warning light..... 74
securing child restraint systems..... 37, 39, 41
unbuckling..... 16
use during pregnancy..... 17
using..... 16
Seats, front..... 79
Side door mirrors..... 96
Side impact airbags..... 27
Side marker lights, changing bulbs..... 227
Sirius satellite radio..... 138, 140, 141
Snow chains..... 253
Snow tires..... 253
Sound settings, audio system..... 134
Spare tire..... 254
Speed-dependent steering..... 157
Spin control..... 155
SRS..... 18
Stability system..... 155
indicator light..... 73
Starting the engine..... 103
with keyless drive..... 104

Starting the vehicle
after a crash (crash mode)..... 32
Start inhibitor (immobilizer)..... 52
Steel grid in cargo area..... 207
Steering wheel
adjusting..... 84
horn..... 84
keypad..... 84, 120, 131
Stone chips, touching up..... 264
Storage spaces..... 188
Studded tires..... 253
Sunroof (moonroof)..... 98, 99
Supplemental restraint system..... 18
warning light..... 74

T

Tailgate
driving with it open..... 194
power operated..... 202
wiper/washer..... 92
Tailgate wipers..... 232
Taillights, changing bulbs..... 228
Telephone (cellular), hands-free connection (Cell phone, hands-free connection). 143
Temporary spare tire..... 254
Three-way catalytic converter..... 200
Tire designations..... 249
Tire Pressure Monitoring System.... 259, 260
indicator light..... 73
Tires
age..... 245
changing from summer to winter..... 254
glossary of terms..... 250
improving economy..... 245
inflation pressure..... 246, 247
inflation pressure tables..... 248, 249
snow..... 253
spare..... 254
specifications..... 247
storing..... 244
studded..... 253
tire pressure monitoring system..... 259
uniform tire quality grading..... 252
Top tether anchors (child restraint systems)..... 43
Touching up paint..... 264
Towing a trailer..... 210, 211
trailer hitch..... 211
Towing the vehicle..... 212, 213
Traction control..... 155
Trailer towing..... 210, 211
trailer hitch..... 211
Transmission
general description..... 107, 108
oil..... 274
shiftlock override..... 108
Tread wear indicator..... 244
Trip computer..... 152
Trip odometers..... 76
Trips, long distance..... 195
Turn signals
changing bulbs..... 227
indicator lights..... 73, 88
Two-stage booster cushion..... 45

U

Uniform Tire Quality Grading..... 252
Unlocking the vehicle..... 54
Upholstery care..... 263

V

Vanity mirror..... 190
changing bulbs..... 230
Vehicle dimensions
V70..... 268
XC70..... 270
Vehicle Event Data..... 8, 216
Vehicle loading..... 202, 251
roof loads..... 206
Vehicle maintenance..... 216
performed by the owner..... 217
Vehicle weights..... 271
Ventilated seats..... 126
Volvo and the environment..... 10
Volvo Inflatable Curtain..... 29
Volvo maintenance..... 216
Volvo On Call Roadside Assistance..... 276
Volvo programs..... 276

W

Warning flashers, hazard..... 87
Warning lights..... 71, 72, 73
Warning symbol..... 75
Warning system, collision..... 160
Warranties..... 216
Washer fluid..... 232, 274
Washers
headlight..... 92
windshield..... 91
Water, driving through..... 195
Waxing..... 263
Weights..... 271
Wheels
changing..... 255, 256
storing..... 244
Wheels and tires, introduction..... 244
Whiplash Protection System..... 30
Windows
power..... 94, 95
Windshield
rain sensor..... 91
washers..... 92
wipers/washers..... 91
Windshield washer fluid..... 232, 274
Windshield wipers..... 231
Wiper blades
replacing tailgate wiper..... 232
replacing windshield wipers..... 231

Volvo. for life

VOLVO

Volvo Car Corporation TP 10069 (USA & Canada), AT 0820, Printed in Sweden, Göteborg 2008, Copyright © 2000-2008 Volvo Car Corporation